PROCEEDINGS OF SPIE

SPIEDigitalLibrary.org/conference-proceedings-of-spie

The Imaging X-Ray Polarimetry Explorer (IXPE): technical overview II

Stephen L. O'Dell, Primo Attinà, Luca Baldini, Mattia Barbanera, Wayne H. Baumgartner, et al.

Stephen L. O'Dell, Primo Attinà, Luca Baldini, Mattia Barbanera, Wayne H. Baumgartner, Ronaldo Bellazzini, Jeff Bladt, Stephen D. Bongiorno, Alessandro Brez, Elisabetta Cavazzuti, Saverio Citraro, Enrico Costa, William D. Deininger, Ettore Del Monte, Kurtis L. Dietz, Niccolò Di Lalla, Immacolata Donnarumma, Ronald F. Elsner, Sergio Fabiani, Riccardo Ferrazzoli, Larry Guy, William Kalinowski, Victoria M. Kaspi, Anthony R. Kelley, Jeffrey J. Kolodziejczak, Luca Latronico, Carlo Lefevre, Leonardo Lucchesi, Alberto Manfreda, Herman L. Marshall, James Masciarelli, Giorgio Matt, Massimo Minuti, Fabio Muleri, Hikmat Nasimi, Alessio Nuti, Leonardo Orsini, Darren Osborne, Matteo Perri, Melissa Pesce-Rollins, Colin Peterson, Michele Pinchera, Simonetta Puccetti, Brian D. Ramsey, Ajay Ratheesh, Roger W. Romani, Francesco Santoli, Andrea Sciortino, Carmelo Sgrò, Brian T. Smith, Gloria Spandre, Paolo Soffitta, Allyn F. Tennant, Antonino Tobia, Alessio Trois, Jeffrey Wedmore, Martin C. Weisskopf, Fei Xie, Francesco Zanetti, Cheryl Alexander, D. Zachery Allen, Fabrizio Amici, Spencer Antoniak, Raffaella Bonino, Fabio Borotto, Shawn Breeding, Daniele Brienza, H. Kyle Bygott, Ciro Caporale, Claudia Cardelli, Marco Ceccanti, Mauro Centrone, Giuseppe Di Persio, Yuri Evangelista, MacKenzie Ferrie, Joseph Footdale, Brent Forsyth, Michelle Foster, Shuichi Gunji, Eli Gurnee, Grant Hibbard, Sandra Johnson, Eric Kelly, Kiranmayee Kilaru, Fabio La Monaca, Shelley Le Roy, Pasqualino Loffredo, Guido Magazzu, Marco Marengo, Alessandra Marrocchesi, Francesco Massaro, Jeffery McCracken, Michael McEachen, Paolo Mereu, Scott Mitchell, Ikuyuki Mitsuishi, Alfredo Morbidini, Federico Mosti, Michela Negro, Chiara Oppedisano, Richard Pacheco, Alessandro Paggi, Steven D. Pavelitz, Christina Pentz, Raffaele Piazzola, Brad Porter, Alessandro Profeti, Jaganathan Ranganathan, John Rankin, Noah Root, Alda Rubini, Stephanie Ruswick, Javier Sanchez, Emanuele Scalise, Sarah Schindhelm, Chet O. Speegle, Toru Tamagawa, Marcello Tardiola, Amy L. Walden, Bruce Weddendorf, David Welch, "The Imaging X-Ray Polarimetry Explorer (IXPE): technical overview II," Proc. SPIE 11118, UV, X-Ray, and Gamma-Ray Space Instrumentation for Astronomy XXI, 111180V (9 September 2019); doi: 10.1117/12.2530646

Event: SPIE Optical Engineering + Applications, 2019, San Diego, California, United States

The Imaging X-ray Polarimetry Explorer (IXPE): technical overview II

Stephen L. O'Dell* [a], Primo Attinà [b], Luca Baldini [c,d], Mattia Barbanera [c], Wayne H. Baumgartner [a], Ronaldo Bellazzini [c], Jeff Bladt [e], Stephen D. Bongiorno [a], Alessandro Brez [c], Elisabetta Cavazzuti [f], Saverio Citraro [c], Enrico Costa [g], William D. Deininger [e], Ettore Del Monte [g], Kurtis L. Dietz [a], Niccolò Di Lalla [c], Immacolata Donnarumma [f], Ronald F. Elsner [a], Sergio Fabiani [g], Riccardo Ferrazzoli [g], Larry Guy [e], William Kalinowski [e], Victoria M. Kaspi [h], Anthony R. Kelley [a], Jeffery J. Kolodziejczak [a], Luca Latronico [i], Carlo Lefevre [g], Leonardo Lucchesi [c], Alberto Manfreda [c], Herman L. Marshall [j], James Masciarelli [e], Giorgio Matt [k], Massimo Minuti [c], Fabio Muleri [g], Hikmat Nasimi [c], Alessio Nuti [c], Leonardo Orsini [c], Darren Osborne [l], Matteo Perri [m,n], Melissa Pesce-Rollins [c], Colin Peterson [e], Michele Pinchera [c], Simonetta Puccetti [n], Brian D. Ramsey [a], Ajay Ratheesh [g,o], Roger W. Romani [p], Francesco Santoli [g], Andrea Sciortino [q], Carmelo Sgrò [c], Brian T. Smith [e], Gloria Spandre [c], Paolo Soffitta [g], Allyn F. Tennant [a], Antonino Tobia [g], Alessio Trois [r], Jeffrey Wedmore [e], Martin C. Weisskopf [a], Fei Xie [g], Francesco Zanetti [q], Cheryl Alexander [s], D. Zachery Allen [e], Fabrizio Amici [g], Spencer Antoniak [e], Raffaella Bonino [i,t], Fabio Borotto [i], Shawn Breeding [a], Daniele Brienza [g], H. Kyle Bygott [e], Ciro Caporale [i], Claudia Cardelli [c], Marco Ceccanti [c], Mauro Centrone [m], Giuseppe Di Persio [g], Yuri Evangelista [g], MacKenzie Ferrie [e], Joseph Footdale [e], Brent Forsyth [l], Michelle Foster [a], Shuichi Gunji [u], Eli Gurnee [e], Grant Hibbard [e], Sandra Johnson [e], Eric Kelly [e], Kiranmayee Kilaru [v], Fabio La Monaca [g], Shelley Le Roy [w], Pasqualino Loffredo [g], Guido Magazzu [c], Marco Marengo [i], Alessandra Marrocchesi [c], Francesco Massaro [i,t], Jeffrey McCracken [s], Michael McEachen [x], Paolo Mereu [i], Scott Mitchell [e], Ikuyuki Mitsuishi [y], Alfredo Morbidini [g], Federico Mosti [i], Michela Negro [i,t], Chiara Oppedisano [i], Richard Pacheco [e], Alessandro Paggi [i,t], Steven D. Pavelitz [a], Christina Pentz [e], Raffaele Piazzolla [g], Brad Porter [e], Alessandro Profeti [c], Jaganathan Ranganathan [v], John Rankin [g,z], Noah Root [e], Alda Rubini [g], Stephanie Ruswick [l], Javier Sanchez [w], Emanuele Scalise [g], Sarah Schindhelm [e], Chet O. Speegle [a], Toru Tamagawa [aa], Marcello Tardiola [i], Amy L. Walden [a], Bruce Weddendorf [ab], David Welch [l]

[a] NASA Marshall Space Flight Ctr., Huntsville, AL 35812, USA
[b] INAF Osservatorio Astrofisico di Torino, Strada Osservatorio 20, 10025 Pino Torinese (TO), Italy
[c] Istituto Nazionale di Fisica Nucleare – Pisa, Largo Bruno Pontecorvo 3, 56127 Pisa (PI), Italy
[d] Università di Pisa, Lungarno Antonio Pacinotti 43, 56126 Pisa (PI), Italy
[e] Ball Aerospace, 1600 Commerce Street, Boulder, CO 80301 USA
[f] Agenzia Spaziale Italiana, Via del Politecnico, 00133 Roma (RM), Italy
[g] INAF Istituto di Astrofisica e Planetologia Spaziali, Via del Fosso del Cavaliere 100, 00133 Roma (RM), Italy
[h] McGill University, 3600 University Street, Montreal QC, H3A 2T8, Canada
[i] Istituto Nazionale di Fisica Nucleare – Torino, Via Pietro Giuria 1, 10125 Torino (TO), Italy
[j] Massachusetts Institute of Technology, 77 Massachusetts Avenue, Cambridge, MA 02139, USA
[k] Università degli Studi Roma Tre, Via della Vasca Navale 84, 00146 Roma (RM), Italy
[l] Lab. for Atmospheric and Space Physics, 1234 Innovation Drive, Boulder, CO 80303, USA

* Contact author (SLO): stephen.l.odell@nasa.gov; voice +1 (256) 961-7776; fax +1 (256) 961-7522
Postal address: NASA/MSFC/ST12; 320 Sparkman Drive NW; Huntsville, AL 35805-1912, USA

UV, X-Ray, and Gamma-Ray Space Instrumentation for Astronomy XXI, edited by Oswald H. Siegmund, Proc. of SPIE
Vol. 11118, 111180V · © 2019 SPIE · CCC code: 0277-786X/19/$21 · doi: 10.1117/12.2530646

[m] INAF Osservatorio Astronomico di Roma, Via Frascati 33, 00078 Monte Porzio Catone (RM), Italy
[n] ASI Space Science Data Ctr., Via del Politecnico, Edificio D, 00133 Roma (RM), Italy
[o] Università degli Studi di Roma "Tor Vergata", Via Lucullo, 11, 00187 Roma (RM), Italy
[p] Stanford University, 382 Via Pueblo Mall, Stanford, CA 94305-4060, USA
[q] OHB Italia SpA, Via Gallarate 150, 20151 Milano (MI), Italy
[r] INAF Osservatorio Astronomico di Cagliari, Via della Scienza 5, 09047 Selargius (CA), Italy
[s] Linc Research, Marshall Space Flight Ctr., Huntsville, AL 35812, USA
[t] Università degli Studi di Torino, Via Giuseppe Verdi 8, 10124 Torino (TO), Italy
[u] Yamagata University, 1-4-12 Kojirakawa-machi, Yamagata-shi, 990-8560, Japan
[v] USRA, Marshall Space Flight Ctr., Huntsville, AL 35812, USA
[w] ESSCA, Marshall Space Flight Ctr., Huntsville, AL 35812, USA
[x] Northrop Grumman Innovation Systems, 600 Pine Avenue, Goleta, CA 93117, USA
[y] Nagoya University, Furo-cho, Chikusa-ku, Nagoya, 464-8602, Japan
[z] Università di Roma "Sapienza", Piazzale Aldo Moro 5, 00185 Roma (RM), Italy
[aa] RIKEN Nishina Ctr., 2-1 Hirosawa, Wako, Saitama 351-0198, Japan
[ab] Weddendorf Design, 14060 Valley Vista Drive, Huntsville, AL 35803, USA

ABSTRACT

The *Imaging X-ray Polarimetry Explorer* (IXPE) will add polarization to the properties (time, energy, and position) observed in x-ray astronomy. A NASA Astrophysics Small Explorer (SMEX) in partnership with the Italian Space Agency (ASI), IXPE will measure the 2–8-keV polarization of a few dozen sources during the first 2 years following its 2021 launch. The IXPE Observatory includes three identical x-ray telescopes, each comprising a 4-m-focal-length (grazing-incidence) mirror module assembly (MMA) and a polarization-sensitive (imaging) detector unit (DU), separated by a deployable optical bench. The Observatory's Spacecraft provides typical subsystems (mechanical, structural, thermal, power, electrical, telecommunications, etc.), an attitude determination and control subsystem for 3-axis stabilized pointing, and a command and data handling subsystem communicating with the science instrument and the Spacecraft subsystems.

Keywords: X-ray astronomy, polarimetry, missions, grazing-incidence optics, gas pixel detectors

1. INTRODUCTION

As the first x-ray astronomy mission dedicated to polarimetry, the *Imaging X-ray Polarimetry Explorer* (IXPE)[1,2] will expand the information space for study of cosmic x-ray sources, adding polarization data to temporal, spectral, and imaging data. Such polarization data provide unique information on astrophysical magnetic fields or on scattering, which temporal and spectral data alone cannot. During its baseline two-year mission, IXPE will make scientifically meaningful measurements of the x-ray polarization of a few dozen sources—including various types of neutron stars, blackhole systems, active galactic nuclei, and supernova remnants. In contrast, the only statistically secure measurement of x-ray polarization in a cosmic source is that of the Crab Nebula,[3,4] obtained over 40 years ago, using the crystal polarimeters aboard the *Orbiting Solar Observatory 8* (OSO-8).

This technical overview describes the IXPE mission (§2), its flight system (§3), and its ground system (§4). It updates the previous technical overview,[5] including changes between the Preliminary Design Review (PDR, 2018 June) and the Critical Design Review (CDR, 2019 June). Finally, the overview concludes (§5) with a list of IXPE mission milestones.

2. MISSION

Selected in 2017 January, as a NASA Astrophysics Small Explorer (SMEX), IXPE is scheduled to launch in 2021 Spring. Section 2.1 summarizes the architecture and technical capabilities; Section 2.2 describes the roles of the mission partners.

2.1. Mission description

Figure 1 summarizes the architecture and technical capabilities of the IXPE mission, highlighting recent changes. Shortly after the Mission CDR, NASA's Launch Services Program (LSP), at Kennedy Space Center (KSC), selected the SpaceX Falcon 9, to launch IXPE into a near-equatorial circular orbit at 555–620-km altitude. The primary ground station is Malindi; the secondary, Singapore.

The baseline IXPE mission will last 2 years, following a 1-month commissioning phase. All scientific data will be publicly available through NASA's High-Energy Astrophysics Science Archive Research Center (HEASARC) at GSFC. If approved, IXPE will continue beyond 25 months, initiating a HEASARC-administered general observer (GO) program.

Mission name	Imaging X-ray Polarimetry Explorer (IXPE)
Mission category	NASA Astrophysics Small Explorer (SMEX), with Explorers Program Office (GSFC)
Launch	2021 on **SpaceX Falcon 9, from Kennedy Space Center (KSC) launch complex 39A**
Operational phase	2 years following 1 month commissioning; extension of operations possible
Orbital parameters	Near-equatorial, circular at 555–620 km altitude
Ground stations	Malindi (3°S, ASI contribution) primary; Singapore (1°N, KSAT commercial on NASA NEN) secondary
Science payload	3 x-ray telescopes, 4.0-m focal length (deployed), co-aligned to forward star tracker
Telescope optics (3+1)	24 nested monolithic (two-reflection) electroformed shells, per mirror module assembly (MMA)
Telescope detector (3+1)	Polarization-sensitive gas pixel detector (GPD) to image photo-electron track, per detector unit (DU)
Polarization sensitivity	Minimum Detectible Polarization (99% confidence) $MDP_{99} < 5.5\%$, for 0.5-mCrab in 10 days
Spurious modulation	< 0.3% systematic error in modulation amplitude for an unpolarized source
Angular resolution	< 30-arcsec system-level half-power diameter (HPD)
Field of view (FOV)	10-arcmin diameter overlapping fields of view for 3 detectors' polarization-sensitive areas
Energy band; resolution	2–8 keV; $(\Delta E/E) \approx 20\%$ @ 5.9 keV
Timing accuracy	20 µs, using GPS pulse-per-second signal and on-board clocks
Spacecraft pointing	3-axis stabilized pointing (non-propellant) with forward and aft star trackers; **dithering selectable**
X-ray calibration (ground)	Each MMA and DU separately; **at least one telescope (MMA-DU together)**
X-ray calibration (space)	Each DU with 4 radioactive calibration sources; each telescope with astrophysical sources

Figure 1. Mission description and technical capabilities. Recent significant changes (**highlighted**) are discussed in this paper.

IXPE flight system (§3)—the "Observatory"—comprises the "Payload" and the "Spacecraft". The Payload (§3.1) is the x-ray telescope system: 3 x-ray telescopes, each with x-ray optics and detector separated by a shared optical bench (boom), deployed to match the telescopes' 4-m focal length. Additional Payload components support operation of the telescopes.

Optimized for polarimetry at 2–8 keV, the polarization sensitivity supports accomplishing IXPE scientific objectives within the 2-year baseline mission. Besides measuring x-ray polarization, the telescopes provide moderate angular resolution over a useful field of view, moderate spectral resolution, and excellent timing.

The IXPE Team will calibrate each x-ray optic and each detector separately, and validate performance of at least one telescope (paired optic and detector) on the ground. Due to schedule pressures, not all 4 (3 flight + 1 spare) telescopes will be calibrated on the ground as originally planned. On orbit, 4 radioactive calibration sources enable monitoring the performance of each detector. Both on-ground and on-orbit calibrations utilize polarized sources and unpolarized sources.

The Spacecraft (§3.2) supports non-mission-specific functions and also provides features to enable operation of the flight system as an astronomical observatory: 3-axis stabilized pointing (non-propellent), star trackers, GPS receivers for time and position, etc. Recently, pointing-system capabilities were enhanced to support "dithering"—controlled, small-amplitude oscillations of the pointing direction. With dithering enabled, each x-ray source is sampled over numerous detector pixels, making feasible calibration of the detector to the required statistical precision. Note that x-ray events and aspect data are both time-tagged; thus, dithering does not smear the image when mapped into celestial coordinates.

2.2. Mission partners

IXPE is a NASA mission in partnership with the Italian space agency, Agenzia Spaziale Italiana (ASI). NASA Marshall Space Flight Center (MSFC) manages the IXPE Project, reporting to the Explorers Program Office at Goddard Space Flight Center (GSFC). Ball Aerospace is the IXPE prime contractor and will also oversee the Mission Operations Center (MOC) at the University of Colorado Laboratory for Atmospheric and Space Physics (LASP).

ASI manages Italian contributions to the IXPE mission. Principal Italian partners—the Istituto Nazionale di Astrofisica (INAF) Istituto di Astrofisica e Planetologia Spaziali (IAPS), the Istituto Nazionale di Fisica Nucleare (INFN) Pisa, and the contractor OHB Italia SpA (OHB–I)—constitute the Instrument Team. Furthermore, ASI will contribute use of the Malindi ground station and support from the ASI Space Science Data Center (SSDC) to the Science Operations Center (SOC) at MSFC.

In addition to the principal partners identified above, several other institutions contribute to the Technical Team—as evidenced by the affiliations of the co-authors of this paper. Among these are Nagoya University, RIKEN Nishina Center, and several INAF and INFN institutes.

Figure 2 highlights the roles of the IXPE partners, including the Science Team in addition to the aforesaid Technical Team. The Technical Team is responsible for specification, design, development, implementation, testing, and operation of the Observatory; the Science Team, for planning, modeling, simulation, analysis, interpretation, and reporting of the science observations. The Science Team includes astrophysicists from the optics and instrument teams, four Science Co-Investigators from academia, and a few dozen Science Collaborators and Participants from a dozen countries.

Figure 2. Mission partners, including technical and scientific contributors.

3. FLIGHT SYSTEM

Figure 3 depicts the IXPE flight system—the "Observatory"—in three configurations. Once fully deployed, the Observatory features three x-ray telescopes, with 4.0-m focal length, optimized for imaging polarimetry in the energy range 2–8 keV. Functionally, the Observatory comprises the Payload (§3.1) and the Spacecraft (§3.2), as described below.

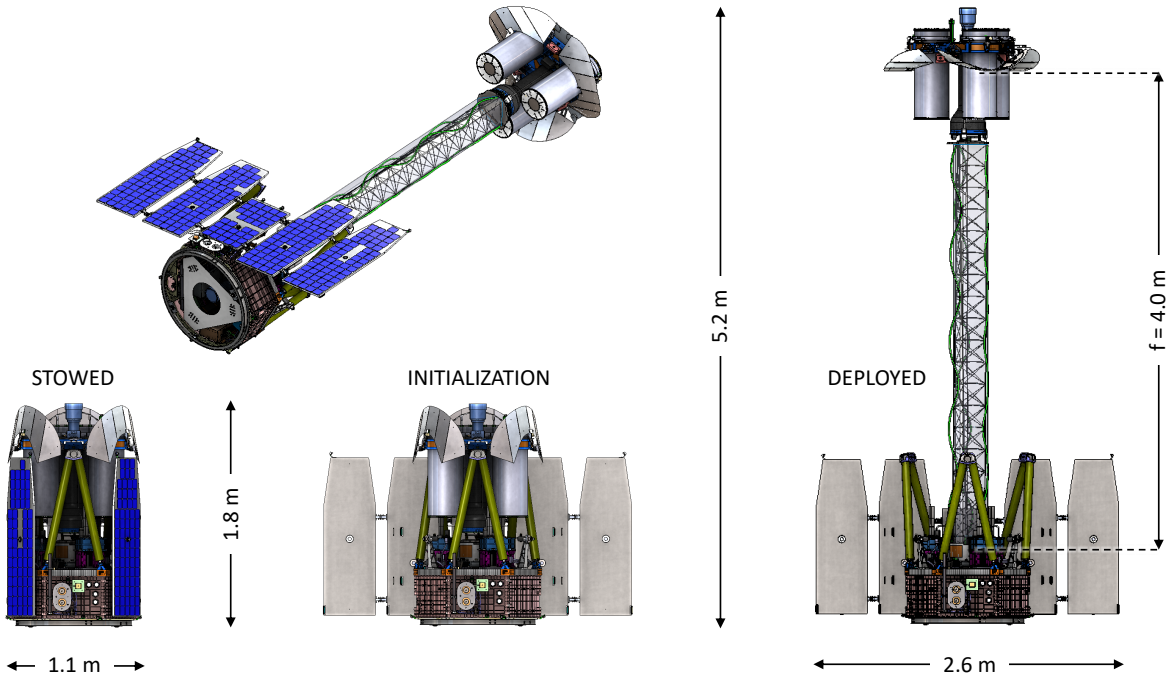

Figure 3. IXPE Observatory—the flight system—shown (left-to-right) stowed for launch, partially deployed for initialization of Spacecraft operations, and fully deployed for science observations.

3.1. Payload

The IXPE telescope system—the "Payload"—constitutes three identical x-ray telescopes incorporating x-ray optics (§3.1.1), x-ray instruments (§3.1.2), and other Payload elements (§3.1.3), as shown in Figure 4. An x-ray calibration program (§3.1.4) will measure the performance of the x-ray optics and instruments prior to delivery to Ball for alignment (§3.1.5) and integration with other Payload components and with the Spacecraft (§3.2).

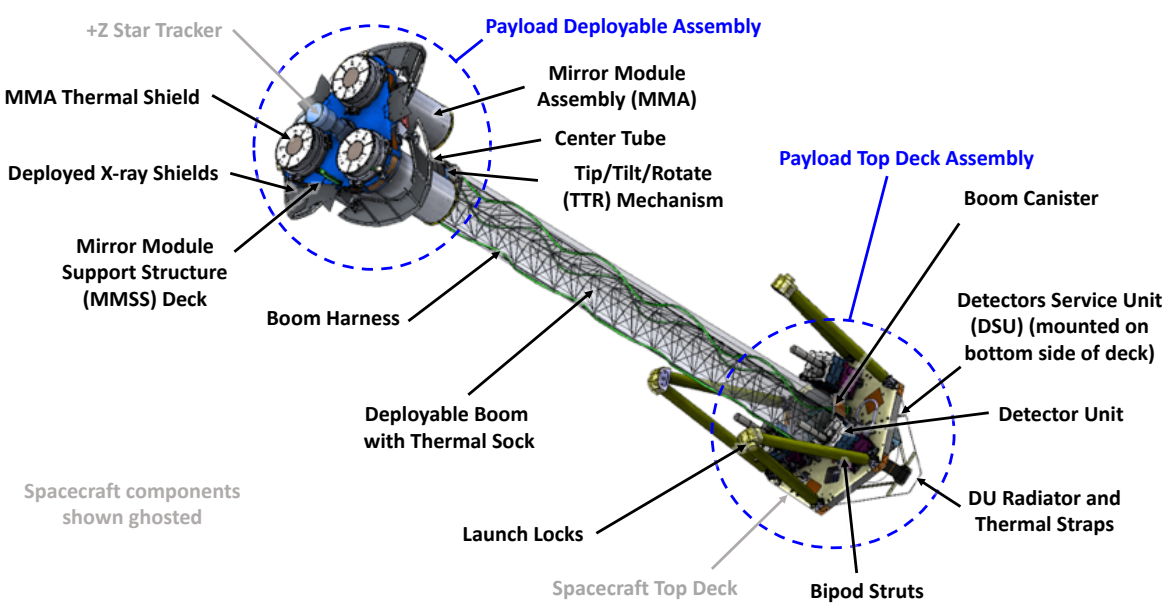

Figure 4. IXPE Payload—the telescope system—with Payload components labeled and Spacecraft components ghosted.

3.1.1. X-ray optics

Figure 5 portrays the IXPE x-ray optics, described previously[5] and in more detail elsewhere.[6,7] NASA MSFC provides the mirror module assemblies (MMAs), with thermal shields[8] contributed by Nagoya University (Japan) and heaters supplied by Ball. Recent design refinements have made the MMAs and the thermal shields more robust against launch-environment stresses.

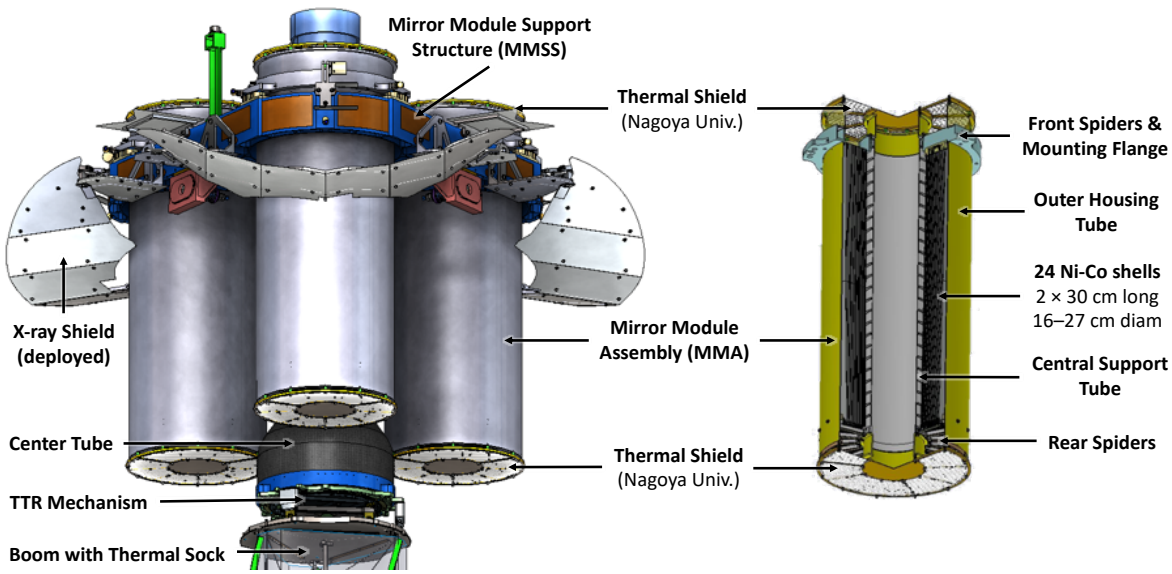

Figure 5. IXPE x-ray optics, comprising three (3) identical Mirror Module Assemblies (MMAs). Left panel shows the MMAs mounted into the mirror module support structure (MMSS), along with other Payload elements (§3.1.3). Right panel displays a cut-away view of an MMA, each with a 200 cm^2 effective area (at 2.3 keV) and 25″ half-power diameter (HPD).

3.1.2. Instrument

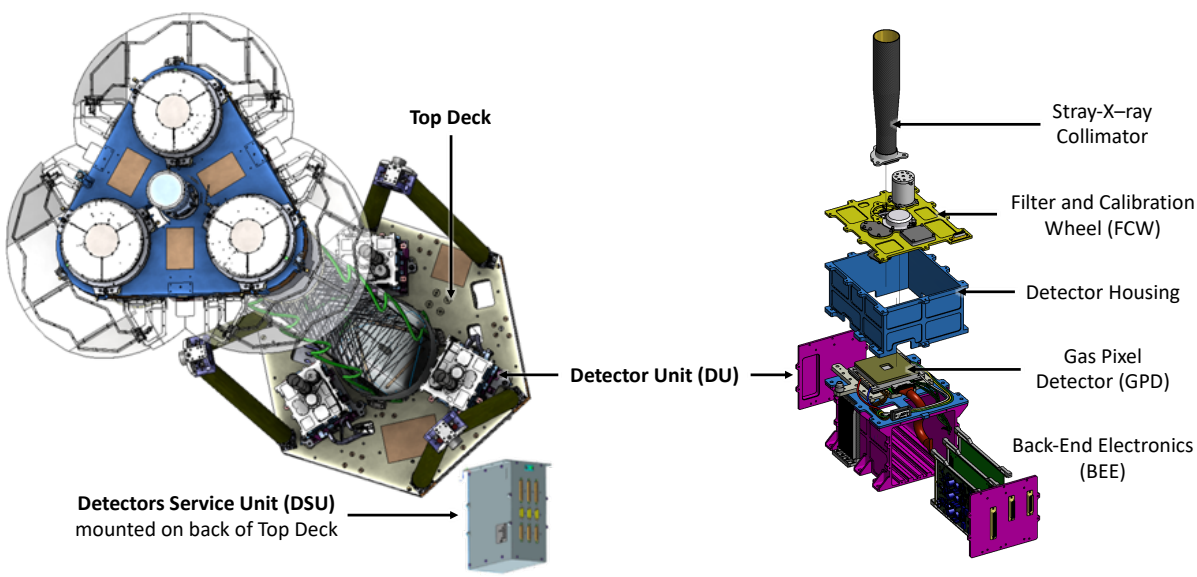

Figure 6. IXPE x-ray instrument, comprising three (3) identical polarization-sensitive Detector Units (DUs) and a Detectors Service Unit (DSU). Left panel shows the clocking and placement of the 3 DUs to align with the MMAs (§3.1.1). Right panel labels the main DU components—Stray X-ray Collimator, Filter and Calibration Wheel (FCW), Detector Housing, Gas Pixel Detector (GPD), and Back-End Electronics (BEE)

Figure 6 displays the IXPE x-ray instrument, described previously[5] and in more detail elsewhere.[9,10] INAF–IAPS and INFN provide the Detector Units (DUs) and Detectors Service Unit (DSU), with contractor OHB Italia. Receiving ground commands through the Spacecraft's Integrated Avionics Unit (IAU, §3.2), the DSU controls all 3 DUs and acquires, consolidates, and transmits DU science and housekeeping data to the IAU, for downlinking to the ground station.

The DU collimator and x-ray shield skirting the MMSS together block non-imaged x rays from reaching the focal plane. Under the collimator is the Filter and Calibration Wheel (§3.1.4 and Figure 10), the Gas Pixel Detector (GPD), and the Back-End Electronics (BEE), which connects to the DSU.

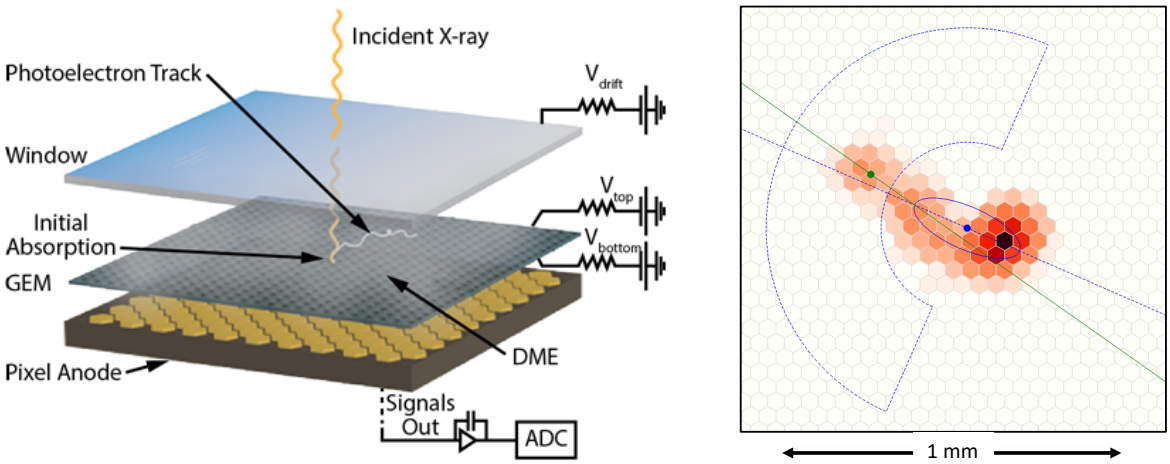

Figure 7. The Gas Pixel Detector (GPD) as a polarization-sensitive instrument. Left panel shows key elements of the GPD and its response to a photo-absorbed x ray—namely, an ionization track of electrons. Right panel displays an actual ionization track resulting from absorption of a 5.9-keV x ray, as amplified by the GEM and imaged onto the GPD's pixelated anode—a 300×352 array of hexagonal pixels at 50-μm pitch.

Invented[11] and developed[12,13] by the Italian detector team, the GPD (Figure 7 left panel) images the ionization track of the photo-electron resulting from absorption of an x ray in a gas, after amplification by Gas Electron Multiplier (GEM). The ionization track (Figure 7 right panel) contains information on the photo-electron's energy and direction, which is correlated with the polarization orientation of the absorbed x ray. In a minor change, the GPD fill gas is now pure dimethyl ether (DME) at 0.8 atmosphere, versus the previous mixture of 80% DME and 20% helium at 1 atmosphere.

3.1.3. Other Payload elements

Ball provides the other Payload elements (Figure 4), which support the x-ray telescope system. The Mirror Module Support Structure (MMSS) holds the MMAs and the fore star tracker (a Spacecraft component). In the stowed configuration (Figure 3 left panel), bipod struts support the MMSS until release of the MMSS launch locks prior to boom deployment. Recent design refinements have made the bipod struts and launch locks more robust in the launch environment.

The deployable boom—from Northrop Grumman Innovation Systems (NGIS, formerly Orbital-ATK)—serves as the telescope system's optical bench. Recent design updates have adjusted the boom twist to enhance stiffness and positioning accuracy, improved the thermal-sock attachment to maintain a smoother profile, and changed the boom-deployment damper from friction to eddy-current to control better the deployment speed. A Tip–Tilt–Rotate (TTR) Mechanism—from NGIS, with recently added home-position indicators—connects the boom and the MMSS center tube, enabling collective alignment of the DUs to the MMAs during the commissioning phase (or later if needed).

A significant change since the previous overview is deletion of a Metrology System (camera and LED-array target), which was to monitor movement of the DUs with respect to the MMAs due to bending of the boom, in order to correct the aspect solution ex post facto for each detected x ray. Extensive Structural, Thermal, and Optical Performance (STOP) analyses showed that, with the thermal sock, bending of the boom will be small and does not require monitoring.

The shared triangular radiator at the aft end supports thermal control of each DU. In addition, recent thermal-design refinements for the Spacecraft (§3.2) shear panels accommodate heat dissipated by the DSU, mounted under the Top Deck.

3.1.4. X-ray calibration

An extensive x-ray calibration has been planned,[14] using the Instrument Calibration Equipment (ICE, §3.1.4.1), the 100-m x-ray test facility (§3.1.4.2), and the on-board Filter and Calibration Wheel (FCW, §3.1.4.3).

3.1.4.1. Instrument Calibration Equipment (ICE)

Using its custom Instrument Calibration Equipment (ICE, Figure 8), INAF–IAPS will calibrate[15] each DU at several x-ray energies, measuring the DU detection efficiency, spatial resolution, modulation factor (polarized sources), spurious modulation (unpolarized sources), and gain maps. Owing to the unanticipated amplitude of spurious modulation, the calibration plan was recently modified to accumulate sufficient data to remove spurious modulation at the required statistical precision, in a manner consistent with the recently adopted strategy to dither the Observatory (§2.1, §3.2).

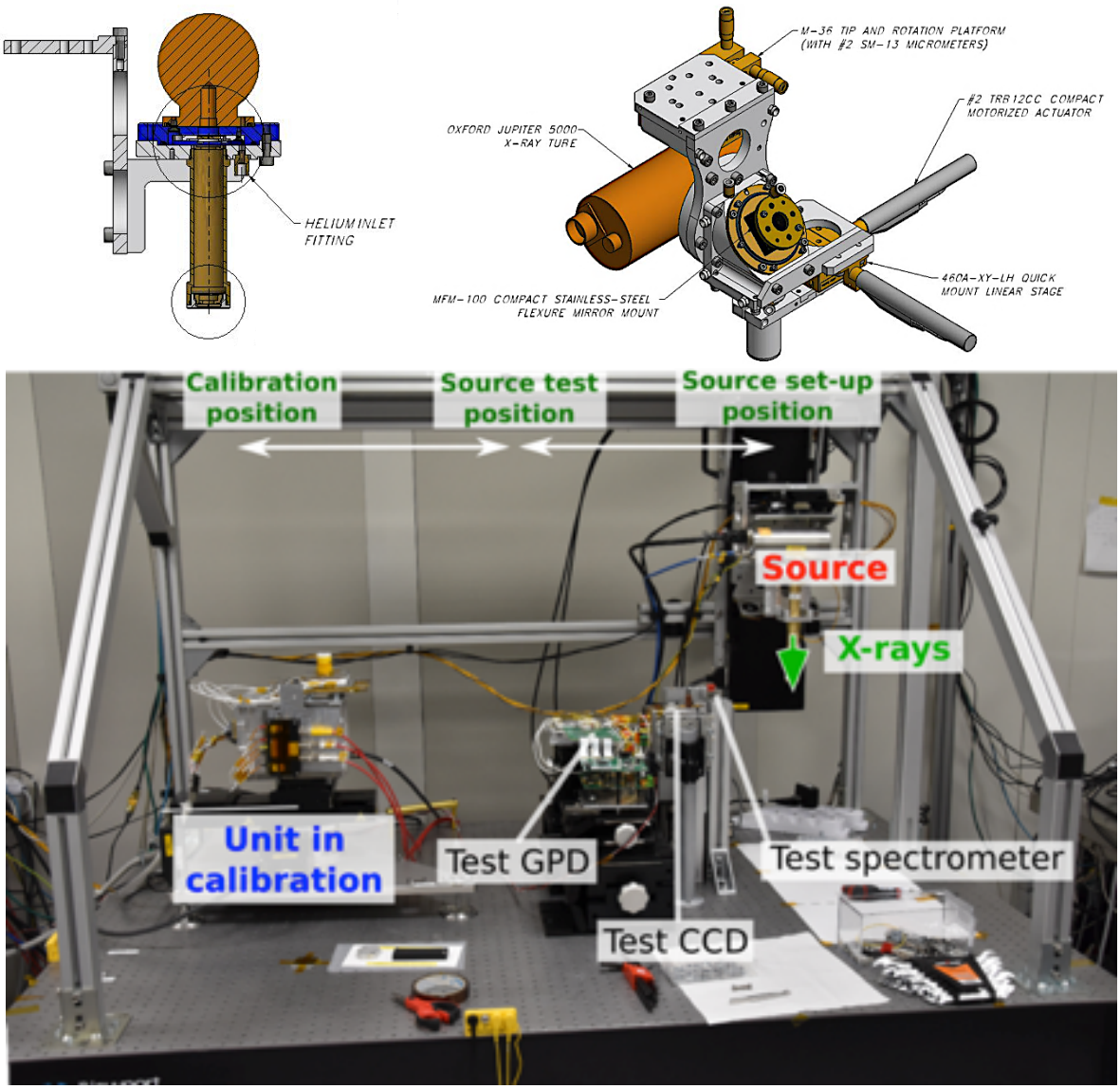

Figure 8. Instrument Calibration Equipment (ICE). The ICE (lower panel) accommodates unpolarized (upper left panel) or polarized (upper right panel) x-ray sources, reference detectors, several stages that position the detector and the source separately, and electrical and data interfaces to the DU. Head-on x-ray tubes (upper left) are used to generate unpolarized x rays when feasible; however, rotating the detector during data collection averages residual source polarization to zero. Bragg reflection near Brewster's angle (45° for x rays) results in a highly polarized x-ray source (upper right).

3.1.4.2. 100-m x-ray test facility

Using its 100-m x-ray test facility (Figure 9), MSFC will calibrate each MMA using GSE detectors and sources at several x-ray energies, measuring MMA effective area and point spread function on axis and at several off-axis angles, ghost (non-imaged) x rays, and focal length. While calibration of a Telescope (MMA+DU) can be synthesized from separate MMA and DU calibrations, at least one MMA and DU will be calibrated together to validate the synthesized response. This validation will measure the Telescope point spread function and effective area for a subset of energies and off-axis angles used for the analogous MMA measurements with GSE detectors. In addition, it will use custom polarized sources to measure polarization-related properties—modulation factor and spurious polarization—for the Telescope. These should be practically identical to those for the DU alone, as grazing-incidence reflectance is nearly independent of polarization. Although the original plan was to validate synthesis of the response for all four (3 flight and 1 spare) Telescopes (MMA+DU), schedule pressures have reduced the number of such validations to "at least one."

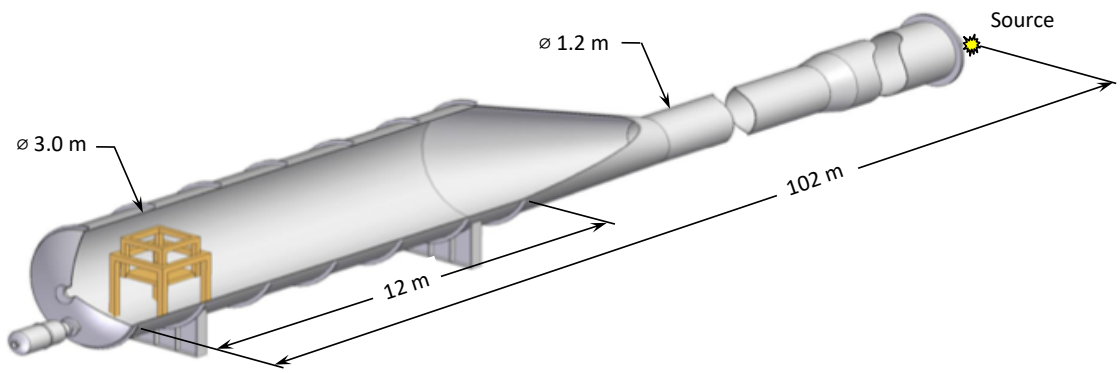

Figure 9. X-ray testing and calibration at MSFC's 100-m x-ray test facility ("Stray-Light Facility").

3.1.4.3. Filter and Calibration Wheel (FCW)

In order to monitor on-orbit performance of the IXPE Instrument, each DU has an FCW (Figure 10) that includes 4 radioactive calibration sources, whose designs have matured over the past year. During earth occultation of the celestial x-ray target (about 35% of the orbit for most targets), one radioactive calibration source will be positioned to illuminate the GPD of one DU. Over time, all 3 DUs will be exposed to all 4 calibration sources, monitoring modulation factor, spurious modulation, and gain throughout science operations.

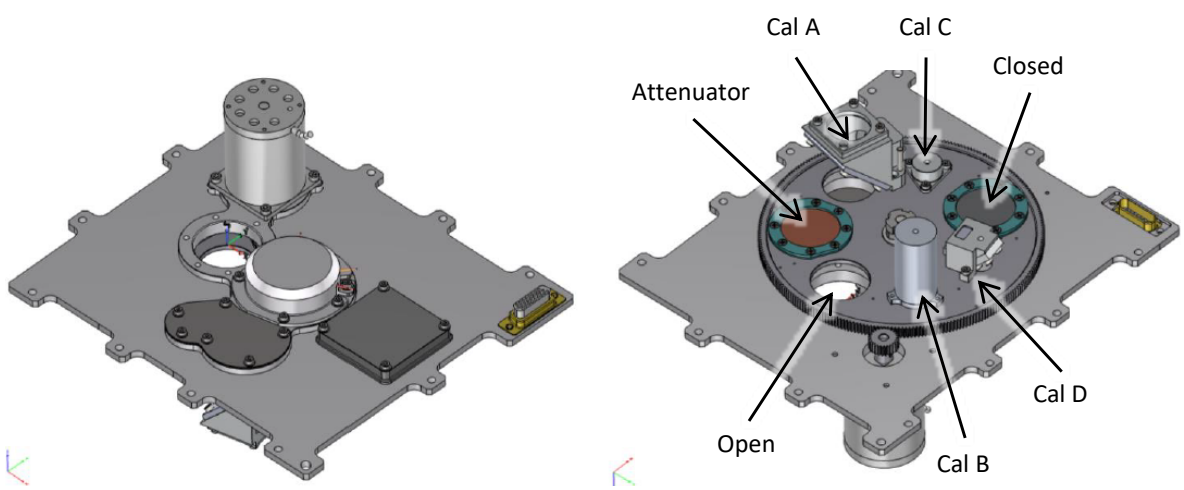

Figure 10. Filter and Calibration Wheel (FCW), providing open, attenuated, and closed positions, plus four ^{55}Fe-powered calibration sources: Cal A, Bragg-reflected polarized 2.98-keV (Ag-Lα fluorescence) and 5.89-keV (Mn-Kα) illumination; Cal B, unpolarized 5.89-keV spot; Cal C, unpolarized 5.89-keV flood; and Cal D, unpolarized 1.74-keV (Si-Kα fluorescence) flood.

The final category of calibration is incidental to the IXPE observing program. Observations of point sources monitor the point-spread function; comparisons of IXPE observations with those of other x-ray observatories provide cross-calibrations of non-polarimetric properties.

3.1.5. Alignment

Ball is responsible for integration and testing of the Observatory, including critical alignment of the MMAs and DUs to ensure that the lines-of-sight (LOS) of the 3 Telescopes—passing through the MMA node and the respective DU node—are mutually parallel. Figure 11 illustrates the alignment approach, comprising the following key steps:

1. Orient +Z star tracker orthogonal to MMSS; orient -Z star tracker orthogonal to back of Spacecraft Top Deck.
2. Orient each MMA optical axis parallel to +Z star tracker; position each MMA node at its nominal coordinates; precisely measure the MMA-node coordinates.
3. Orient each DU orthogonal to Top Deck; precisely position each DU such that the DU-node triangle is congruent to the MMA-node triangle.
4. In orbit, use Tip/Tilt/Rotate (TTR, §3.1.3) mechanism to align DU-node triangle to MMA-node triangle along +Z star tracker LOS, such that the MMA–DU lines of sight are parallel to the +Z star tracker LOS.

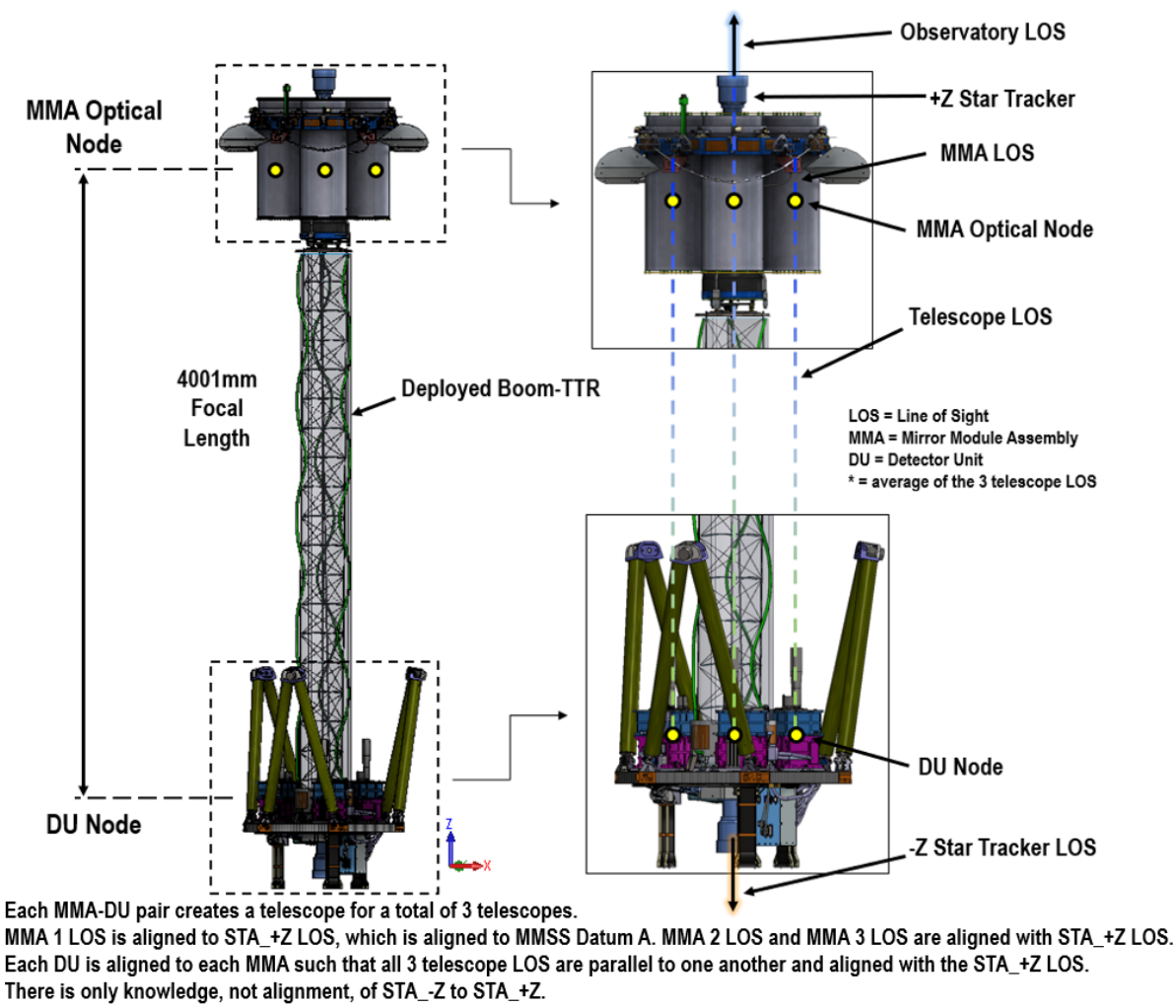

Figure 11. Alignment approach, utilizing mechanical metrology of components and laser metrology with surface-mounted reflectors to establish coordinates, and referencing alignment cubes to measure orientation.

3.2. Spacecraft

Figure 12 shows the IXPE Spacecraft and some of its components. These support typical subsystems: Mechanical; Structural; Thermal; Power; Harness & Electrical; Telecommunications; Command & Data Handling; Attitude Determination & Control; and Flight Software. Note that there is no Propulsion subsystem.

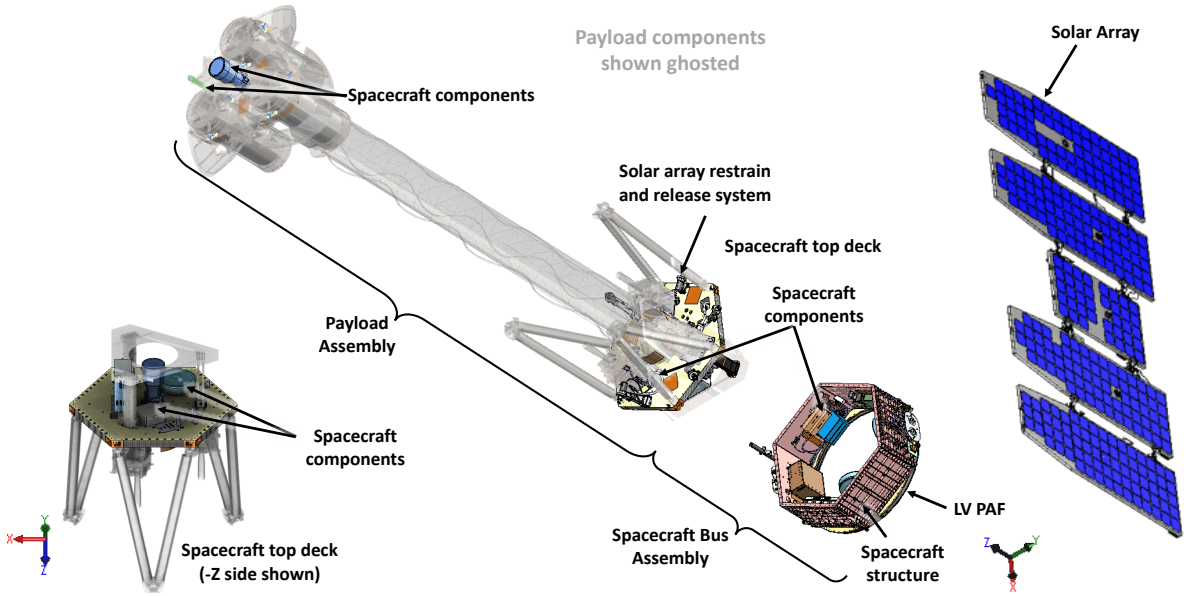

Figure 12. IXPE Spacecraft—the bus—with Spacecraft components labeled and Payload components ghosted.

These subsystems provide the functionality to operate the bus as a Spacecraft and to support operation of the Payload as a telescope system. This section focuses on those subsystems that are specifically tailored to the needs of the IXPE Observatory—Command & Data Handling (§3.2.1) and Attitude Determination & Control (§3.2.2).

3.2.1. Command & Data Handling Subsystem (CDHS)

Through its Integrated Avionics Unit (IAU), the CDHS supplies computational services, memory management, data handling, telemetry management, and time messaging both for the Spacecraft and for the Payload. The CDHS monitors and controls the ADCS, Telecommunications, Electrical Power, and Thermal subsystems. The CDHS also communicates directly with the Instrument's (§3.1.2) Detectors Service Unit (DSU), forwarding commands and receiving and packaging science and housekeeping data from the DSU for transmission to the ground station (§4.3), along with the other telemetered data.

3.2.2. Attitude Determination & Control Subsystem (ADCS)

The ADCS provides 3-axis stabilized pointing—enabling slewing, acquiring, and staring at selected celestial targets—to an expected (a priori) accuracy of about 25 arcseconds (99% circular error probability, CEP_{99}). Using the Global Positioning System (GPS) to obtain precision time and position, it supports accurate time-tagging of science and housekeeping data throughout the Observatory. The ADCS performs momentum management using magnetic torquers to unload the reaction wheels against the earth's magnetic field, obviating the need for a propulsion subsystem.

Figure 12 depicts Spacecraft components, several of which support the ADCS functions: Fore (+Z) and aft (-Z) star trackers (2 optical heads with a shared electronics unit); coarse sun sensors (12 sensors, distributed for omnidirectional coverage); magnetometer (3-axis); torque rods (3 magnetic torquers, orthogonally oriented); reaction wheels (3 assemblies, orthogonally oriented); and GPS (1 receiver with 2 antennae). A recent design iteration moved the magnetometer from within the Spacecraft bus to under the MMSS, to minimize the effect of magnetic torquers on magnetometer measurements. Finally, to accommodate a new requirement to dither the Observatory (§2.1, §3.1.4.1) during Science observations, the ADCS will incorporate flight software to execute the dither function.

4. GROUND SYSTEM

Figure 13 delineates the IXPE ground system, which has three principal branches—science operations (§4.1), mission operations (§4.2), and telecommunications (§4.3).

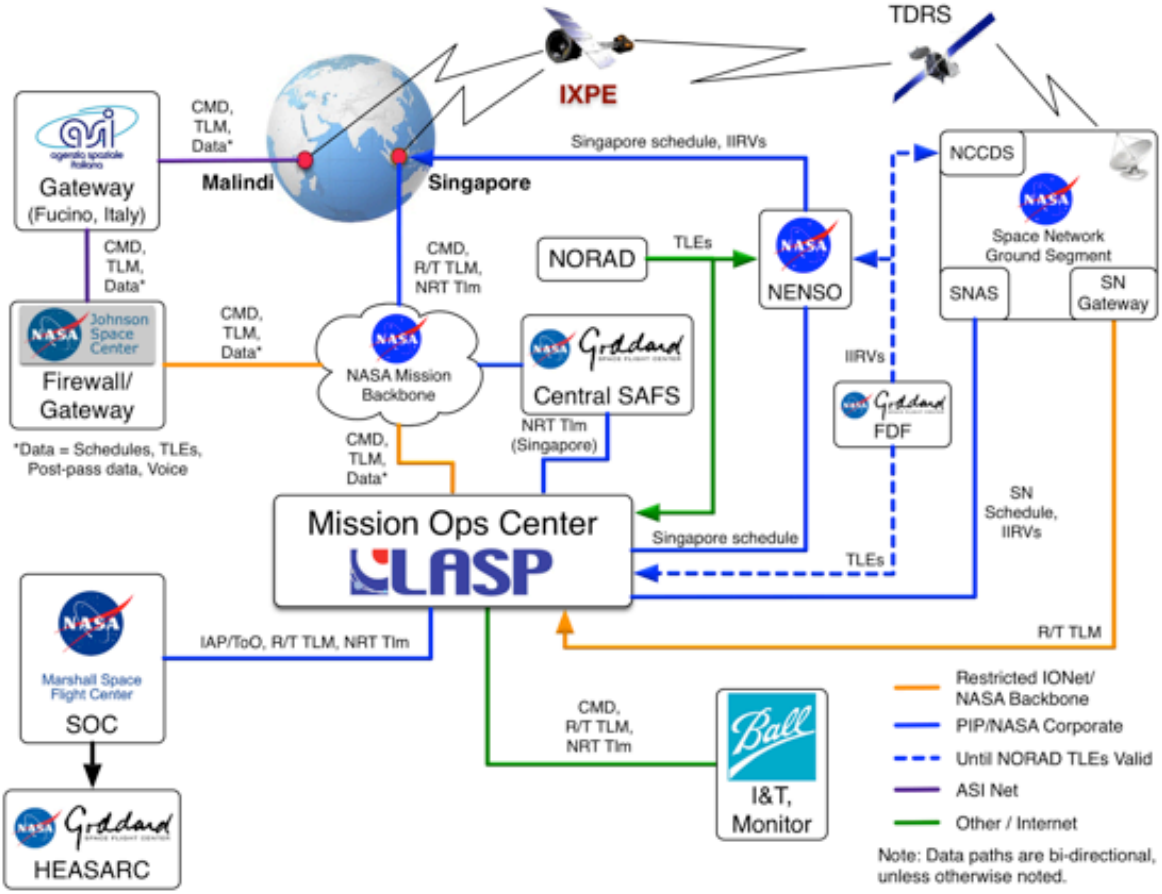

Figure 13. IXPE ground system.

4.1. Science Operations

The Science Operations Center (SOC) at MSFC, with support from the ASI Space Science Data Center (SSDC), is responsible for IXPE science operations. The SOC is charged with design, implementation, and execution of the software tools for observation planning and for science data processing of IXPE observations.

The SOC interfaces with the Mission Operations Center (§4.2) in two roles. First, using input from the IXPE Science Collaboration, the SOC formulates an observing program that it sends to the MOC for detailed scheduling of mission events. Second, the SOC receives from the MOC all Observatory data (science, housekeeping, engineering, and ancillary) needed to generate the science data products for each observation. Within a week of an IXPE observation, the SOC transmits all science data products for that observation to NASA's High-Energy Astrophysics Science Archive Research Center (HEASARC) at GSFC, for public release. ASI's Space Science Data Center will mirror the IXPE data archived at the HEASARC.

4.2. Mission Operations

Ball Aerospace oversees IXPE activities at the Mission Operations Center (MOC), run by the Laboratory for Atmospheric and Space Physics (LASP) at the University of Colorado (CU). Ball engineers support mission operations in monitoring

and assessing technical performance of the Observatory. Besides interacting closely with Ball, the MOC interfaces with the SOC (§4.1) and telecommunicates with the Observatory through the ground stations (§4.3).

The MOC formulates the detailed timeline of science observations (including calibrations) and Spacecraft events (slews, telecommunications, etc.) into a command load, considering various operational constraints. Command loads are transmitted to the Observatory through one of two ground stations. Upon receiving downlinked telemetry, the MOC processes and distributes those data to the SOC and the housekeeping and engineering data to the Ball technical team.

4.3. Telecommunications

For IXPE's near-equatorial orbit, the primary ground station is Malindi (3° S, ASI-contributed) and the secondary, Singapore (1° N, commercial, on NASA's Near-Earth Network). Nominally, commanding passes will occur one day a week; telemetry downlinking passes will be scheduled by the MOC based upon anticipated data volume. Figure 13 illustrates the connectivity between the MOC and the ground stations using existing networks. In addition, NASA's Tracking and Data Relay Satellite System (TDRSS) can provide real-time downlinks during commissioning or anomalies.

5. CONCLUSION

As the first x-ray astronomy mission dedicated to polarimetry, IXPE will provide a unique tool in the study of exotic astrophysical sources—neutron stars, blackhole systems, active galactic nuclei, and supernova remnants. The IXPE Technical Team is working toward mission milestones (Figure 14) leading to Science operations commencing in 2021 Spring for a baseline two-year mission. If approved by NASA, IXPE operations will continue thereafter, serving the astrophysics community through a General Observer program.

Date	Event	Event description
2015 August	Phase-A selection	Selection by Science Mission Directorate (SMD) for Concept Study Report (1 of 3)
2017 January	Phase-B selection	Down-selection by Science Mission Directorate (SMD) for mission formulation
2017 September	M-SRR	Mission System Requirements Review
2018 June	M-PDR	Mission Preliminary Design Review
2018 November	KDP-C	Key Decision Point – C (Confirmation Review)
2019 March	GS-PDR	Ground System Preliminary Design Review
2019 June	M-CDR	Mission Critical Design Review
2019 November	GS-CDR	Ground System Critical Design Review
2020 April	M-SIR	Mission System Integration Review
2020 May	KDP-D	Key Decision Point – D
2021 March	ORR and MRR	Operational Readiness Review and Mission Readiness Review
2021 April	Launch	Launch on SpaceX Falcon 9, from Kennedy Space Center (KSC) pad 39A
2021 May	Phase-E start	Start of operational phase, to last at least 2 years

Figure 14. IXPE mission milestones.

ACKNOWLEDGEMENTS

IXPE is a NASA Astrophysics Small Explorers (SMEX) mission, managed by MSFC and overseen by the Explorers Program Office at GSFC. The Italian contribution to the IXPE mission is supported by the Italian Space Agency through agreement ASI-INAF n.2017-12-H.0 and ASI-INFN agreement n.2017-13-H.0. IXPE work at Ball Aerospace is funded by MSFC under contract NNM15AA18C.

REFERENCES

[1] Weisskopf, M. C., Ramsey, B., O'Dell, S., Tennant, A., Elsner, R., Soffitta, P., Bellazzini, R., Costa, E., Kolodziejczak, J., Kaspi, V., Muleri, F., Marshall, H., Matt, G., & Romani, R., "The Imaging X-ray Polarimetry Explorer (IXPE)," SPIE 9905, 17 10pp (2016).

[2] Soffitta, P., "IXPE the Imaging X-ray Polarimetry Explorer," SPIE 10397, 0I 9pp (2017).

[3] Weisskopf, M. C., Cohen, G. G., Kestenbaum, H. L., Long, K. S., Novick, R., & Wolff, R. S., "Measurement of the X-ray polarization of the Crab Nebula," ApJ 208, L125-L128 (1976).

[4] Weisskopf, M. C., Silver, E. H., Kestenbaum, H. L., Long, K. S., & Novick, R., "A precision measurement of the X-ray polarization of the Crab Nebula without pulsar contamination," ApJ 220, L117-L121 (1978).

[5] O'Dell, S. L., Baldini, L., Bellazzini, R., Costa, E., Elsner, R. F., Kaspi, V. M., Kolodziejczak, J. J., Latronico, L., Marshall, H. L., Matt, G., Mulieri, F., Ramsey, B. D., Romani, R. W., Soffitta, P., Tennant, A. F., Weisskopf, M. C., Allen, D. Z., Amici, F., Antoniak, S., Attina, P., Bachetti, M., Barbanera, M., Baumgartner, W. H., Bladt, J., Bongiorno, S. D., Borotto, F., Brooks, T., Bussinger, S., Bygott, H. K., Cavazzuti, E., Ceccanti, M., Citraro, S., Deininger, W. D., Del Monte, E., Dietz, K. L., Di Lalla, N., Di Persio, G., Donnarumma, I., Erickson, J., Evangelista, Y., Fabiani, S., Ferrazzoli, R., Foster, M., Giusti, M., Gunji, S., Guy, L., Johnson, S., Kalinowski, W., Kelley, A. R., Kilaru, K., Lefevre, C., Maldera, S., Manfreda, A., Marengo, M., Masciarelli, J., McEachen, M., Mereu, P., Minuti, M., Mitchell, M. A., Mitchell, S., Mitsuishi, I., Morbidini, A., Mosti, F., Nasimi, H., Negri, B., Orsini, L., Osborne, D., Pavelitz, S. D., Pentz, C., Perri, M., Pesce-Rollins, M., Peterson, C., Piazzolla, R., Pieraccini, S., Pilia, M., Pinchera, M., Puccetti, S., Ranganathan, J., Read, T., Rubini, A., Santoli, F., Sarra, P., Schindhelm, S., Sciortino, A., Seckar, C., Sgrò, C., Smith, B. T., Speegle, C. O., Tamagawa, T., Tardiola, M., Tobia, A., Tortosa, A., Trois, A., Weddendorf, B., Wedmore, J., & Zanetti, D., "The Imaging X-ray Polarimetry Explorer (IXPE): technical overview," SPIE 10699, 1X 14pp (2018).

[6] Ramsey, B. D., "Optics for the Imaging X-ray Polarimetry Explorer," SPIE 10399, 07 10pp (2017).

[7] Ramsey, B. D., "IXPE mirror module assemblies," SPIE 11119, paper 2 (2019).

[8] Mitsuishi, I., Futamura, T., Shimizu, S., Takehara, Y., Yamaguchi, T., Tawara, Y., Tamura, K., Onishi, T., Tachibana, K., Miyata, K., Tamagawa, T., Chiba, T., Tachibana, M., Murashima, K., & Tachikawa, S., "Development of the thermal shield for the optics on board the Imaging X-ray Polarimetry Explorer (IXPE)," SPIE 11119, paper 51 (2019).

[9] Nasimi, H., "Overview of the detector and its readout on board the Imaging X-ray Polarimetry Explorer," SPIE 10699, 5D 8 pp (2018).

[10] Sgrò, C., "The gas pixel detector on board the IXPE mission," SPIE 10397, 0F 7pp (2017).

[11] Costa, E., Soffitta, P., Bellazzini, R., Brez, A., Lumb, N., & Spandre, G., "An efficient photoelectric X-ray polarimeter for the study of black holes and neutron stars," Nature 411, 662-665 (2001).

[12] Bellazzini, R., Spandre, G., Minuti, M., Baldini, L., Brez, A., Cavalca, F., Latronico, L., Omodei, N., Massai, M. M., Sgrò, C., Costa, E., Soffitta, P., Krummenacher, F., & de Oliveira, R., "Direct reading of charge multipliers with a self-triggering CMOS analog chip with 105 k pixels at 50 μm pitch," NIMPA 566, 552-562 (2006).

[13] Bellazzini, R., Spandre, G., Minuti, M., Baldini, L., Brez, A., Latronico, L., Omodei, N., Razzano, M., Massai, M. M., Pesce-Rollins, M., Sgró, C., Costa, E., Soffitta, P., Sipila, H., & Lempinen, E., "A sealed Gas Pixel Detector for X-ray astronomy," NIMPA 579, 853-858 (2007).

[14] Muleri, F., Baldini, L., Baumgartner, W., Evangelista, Y., Fabiani, S., Kolodziejczak, J., Latronico, L., Lefevre, C., O'Dell, S. L., Ramsey, B., Sgrò, C., Soffitta, P., Tennant, A., & Weisskopf, M. C., "Calibrating the IXPE observatory from ground to space," SPIE 10397, 0G 8pp (2017).

[15] Muleri, F., Lefevre, C., Piazzolla, R., Morbidini, A., Amici, F., Attina, P., Centrone, M., Del Monte, E., Di Cosimo, S., Di Persio, G., Evangelista, Y., Fabiani, S., Ferrazzoli, R., Loffredo, P., Maiolo, L., Maita, F., Primicino, L., Rankin, J., Rubini, A., Santoli, F., Soffitta, P., Tobia, A., Tortosa, A., & Trois, A., "Calibration of the IXPE instrument," SPIE 10699, 5C 11pp (2018).