Publication Year	2011
Acceptance in OA@INAF	2023-01-30T12:07:04Z
Title	DUSTER (Dust in the Upper Stratosphere Tracking Experiment and Return):. a balloon-borne dust particle collector
Authors	DELLA CORTE, VINCENZO; PALUMBO, PASQUALE; DE ANGELIS, Simone; Ciucci, A.; Brunetto, R.; et al.
Handle	http://hdl.handle.net/20.500.12386/33094
Journal	MEMORIE DELLA SOCIETÀ ASTRONOMICA ITALIANA SUPPLEMENTI
Number	16

Mem. S.A.It. Suppl. Vol. 16, 14
© SAIt 2011

Memorie della
Supplementi

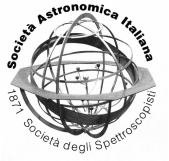

DUSTER (Dust in the Upper Stratosphere Tracking Experiment and Return):

a balloon-borne dust particle collector

V. Della Corte[1], P. Palumbo[1], S. De Angelis[1,2], A. Ciucci[1,2], R. Brunetto[1,3], A. Rotundi[1], F.J.M. Rietmeijer[4], E. Zona[1], E. Bussoletti[1], L. Colangeli[5], F. Esposito[6], E. Mazzotta Epifani[6], V. Mennella[6], S. Peterzen[7], S. Masi[8], and R. Ibba[9]

[1] Dip Scienze Applicate, Università di Napoli 'Parthenope', Centro Direzionale 80143 Napoli, Italy. e-mail: v.dellacorte@gmail.com
[2] Dipartimento Ingegneria Aerospaziale, Università di Napoli Federico II 80143 Napoli, Italy.
[3] European Space Astronomy Centre, 28691 Villanueva de la Cañada, Madrid, Spain
[4] Department of Earth and Planetary Sciences, University of New Mexico, Albuquerque, NM 87131-1116, USA
[5] Solar System Division, Research and Scientific Support Department, European Space Agency, ESTEC, Keplerlaan 1, PO Box 299, 2200 AG Noordwijk ZH, The Netherlands
[6] INAF - Osservatorio Astronomico di Capodimonte 80131 Napoli, Italy
[7] ISTAR (International Science Technology And Research) Pagosa Springs, Colorado USA
[8] Dipartimento di Fisica, Università La Sapienza, 00100 Roma, Italy
[9] ASI (Agenzia Spaziale Italiana),

Abstract. The DUSTER (Dust in the Upper Stratosphere Tracking Experiment and Retrieval) project is aimed at uncontaminated collection and retrieval of stratospheric solid aerosol particles, in the submicron/micron range, from the upper stratosphere. The approach implies: (1) in-situ particles collection; (2) sample recovering; and (3) laboratory analyses. The scientific aim is deriving the dust size distribution, the concentration, chemistry and mineralogy of the collected stratospheric aerosols. The main characteristics of the instrument are: (1) Capability of working autonomously during balloon flight at $30 - 40$ km altitude, temperatures down to $-80°C$; (2) sampling at least 20 m^3 of air to collect several hundreds of aerosol particles); (3) Samples storage and retrieval under controlled conditions. A detailed description of the experiment is reported here.

Key words. Interplanetary dust – Stratospheric aerosol collection - balloon-borne

1. Introduction

Stratospheric aerosols of grains with irregular shapes, variable sizes and chemi-

Send offprint requests to: V. Della Corte

cal compositions strongly influence climate (Lacis et al. 1992; Wang et al. 2004) because of their role in atmospheric chemistry, e.g. ozone partitioning, heterogeneous reactions (McElroy et al. 1986; Solomon et al. 1996) (He & Carmichael 1999), and in radiative forcing (Saxena & Yu 1996). Aerosols can also be used as a tracer of atmospheric dynamics.

The long-term satellite-borne atmospheric experiments of the past two decades yielded global scale data about stratospheric aerosols. To provide a complete and reliable estimate of the properties of stratospheric aerosols, it is desirable to validate satellite data with in-situ aerosol sampling and remote scattering (Berthet et al. 2002) (Ackerman et al. 1989; Okada et al. 1997) and spectral measurements of twilight sky brightness in visual band (Mateshvili & Rietmeijer 2002; Mateshvili et al. 2005).

A sampling of the stratosphere will invariably include particles from different sources with relative contributions that vary as a function of time, altitude, and possibly geographic location. At any time the stratosphere contains extraterrestrial dust, dust from natural terrestrial sources (volcanic dust, wind-blown dust, biomass burning) and dust related to anthropogenic activities.

While the previous experiments collecting and characterizing stratospheric dust at the same altitudes and comparable particle size ranges as investigated by DUSTER, (Palumbo et al. 2008; Testa et al. 1990; Okada et al. 1997) involved several steps in laboratory handling, DUSTER was specifically designed to minimize and control spurious effects, such as contamination, by reducing post-flight sample manipulation during laboratory analyses. We anticipate DUSTER that will allow provide the following critical information on solid aerosols:

- relative abundances of dust from different sources (biomass burning, anthropogenic activities, e.g. coal fly ash, volcanic and extraterrestrial particles);
- the efficiency of stratosphere injection from these sources, residence time and stratosphere mixing;
- chemical and physical properties of individual aerosol components;
- solid aerosol interactions with solar radiation, chemical and physical stability and the role of aerosol as catalyst of chemical reactions, their influence on local stratospheric physical and chemical conditions, and any effects on atmospheric chemistry and the global terrestrial radiation budget.

2. Requirements

The DUSTER instrument was developed following previous experiences on stratospheric dust loading (Testa et al. 1990; Mateshvili & Rietmeijer 2002) and the main technical and operational requirements of collecting and characterizing solid stratospheric aerosols on a regular basis as will be discussed below. While the volatile component is routinely investigated, the refractory component remains poorly studied.

Sample collection altitude range: $30 - 40$ *km.* We concentrate on a poorly known stratospheric region, as it is not accessible with frequently operated high-flying aircraft platforms. Ground-based observations are affected by the foreground with much higher signal from the troposphere and the lower stratosphere. Space-based techniques can be more effective, but data interpretation is based on assumed physical and chemical properties of the aerosol. The targeted collection altitudes, together with the choice of direct and low velocity dust-deposition collection on analytical substrates, will require a stratospheric balloon-borne platform.

The collection device will allow low-speed non-destructive and non-contaminant collection by sampling a sufficient volume of air. We estimated that a minimum sampled volume of about 20 m^3 will be needed to achieve the collection of several hundreds of aerosol particles even in low stratospheric load conditions. The collection technique we have chosen is the inertial collection. This is a well-established technique for solid particle monitoring, which

is based on the decoupling between the gas flux and particle when proper acceleration is induced in the flux.

Sampling will be repeated at different times and locations. The relative abundance of the different aerosol components does depend on time of the year, altitude and location, as different sources of dust with a wide size range will have different residence times. Multiple sampling at different times and locations either implies an expensive long-term program for multiple dedicated flights, or a flexible strategy to reduce costs. In order to have doable program a small, lightweight and autonomous instrument is needed. The instrument has to be used as a piggyback payload, included as a part of synergic payload ensemble on large gondola, or as autonomous experiment on light balloons. The technical requirements listed in Table1 were considered for the instrument design. The block diagram is reported in Fig.1.

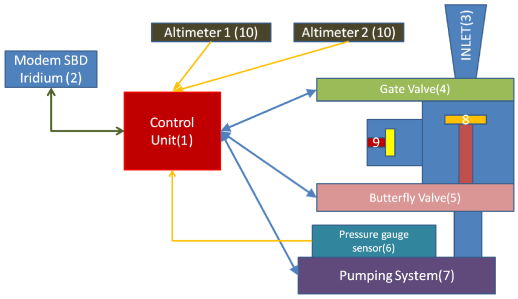

Fig. 1. DUSTER blocks diagram: (1)Control Unit; (2)IRIDIUM Transceiver; (3)INLET pipe exposed to atmosphere; (4)Gate valve connecting INLET to collecting chamber; (5)Butterfly valve between collecting chamber and pumping system; (6)pressure gauge monitoring flow through the instrument; (7)Pumping System with 6 micro-pump carbon vane; (8)Collecting susbstrate; (9)contamination control substrate.

Table 1. Technical requirements for DUSTER instrument

Mass	$\leq 35\ kg$
Power	$\leq 30\ W$
Volume	$\leq 0.05\ m^3$
Operative Altitude	30..40 km
Operative Temperature	$-50..80\ ^\circ C$
Flow Rate	$1\ m^3/h$
Particle size range	$0.1..100\ \mu m$

3. Instrument design

The instrument structure consists of a box $(410 \times 310 \times 310)\ mm^3$ realized by aluminum bars Bosh Rexroth (Fig.2) and two aluminum plates inserted into the box. The plates act as support for the collecting and control elements of the instrument, the first plate fixed under the box holds the electronics and the battery of the instrument, the second plate is mounted above the electronics and holds the collection chamber and the pumping system.

The aluminum box is covered with 5 teflon panels to ensure a benign environment for the sensors, electronics and mechanical devices of the instrument. All the components of the instruments are inside the box except for the inlet pipe, which to allow the atmospheric sampling, protrudes from the teflon cover (Fig.3).

The atmospheric sampling is performed by means of 6 carbon vane volumetric micropumps mounted on a supporting duct connected to the collection chamber, with a flow rate of $1\ m^3/h$. An electrovalve is connected to each pump exhaust (Fig.4): if a pump fails it can be excluded from the pumping system by closing the corresponding electrovalve without compromising the sampling. The pumping system is connected to the collection chamber by a flexible steel fitting.

In order to satisfy the cleanliness requirements the collection chamber is realized following Ultra High Vacuum Standards. The chamber is constructed from Ergal (7075 aluminium alloy): 4 parts are connected with ConFlat flanges and copper gaskets (Fig.5). In the chamber 2 identical substrates are accommodated: one exposed directly to the gas flow (sample collector) the other in a secondary chamber orthogonal to the flow (blank) dedicated to monitoring the contamination. The chamber is sealed by two UHV valves, a gate

valve connected to the inlet pipe and a butterfly valve connected to the pumping system.

The valves are driven by two stepper motors controlled by the main electronics. In order to guarantee cleanliness, a single shot valve protects the inlet pipe; when the instrument reach the operative altitude the valve autonomously opens.

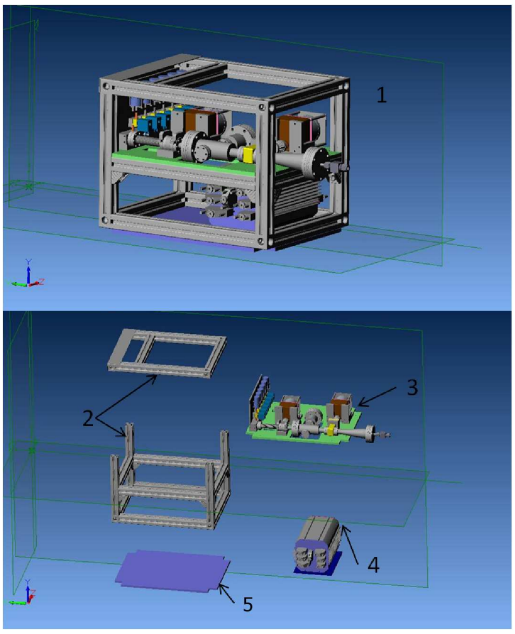

Fig. 2. DUSTER mechanics: (1)Instrument assembled; (2)External box; (3)Instrument plate with collecting chamber and pumping system; (4)Electronics Box; (5)Bottom plate.

3.1. Instrument Control (electronics and software, sensors)

Instrument electronics.

The heart of the electronics control system is an Athena II Diamond Systems PC104 SBC (Single Board Computer). The SBC combines the low-power, highly integrated VIA Mark CoreFusion^{TM} processor with on-board memory and data acquisition into a compact form factor. The Athena II is a small, low-heat-dissipation, and extremely rugged embedded

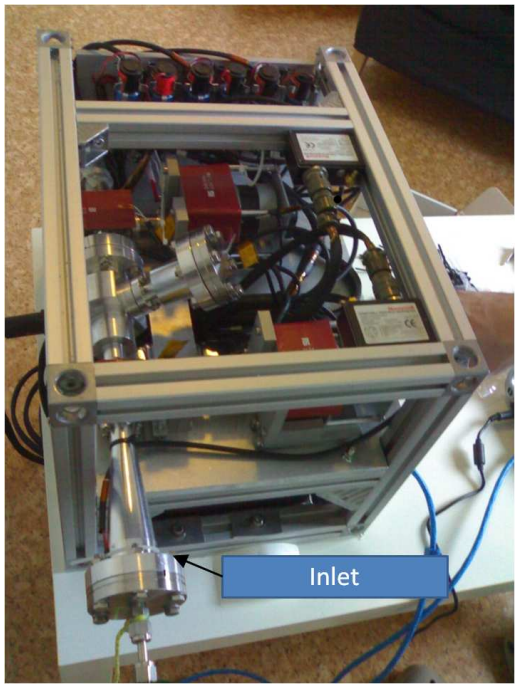

Fig. 3. DUSTER Instrument without teflon cover: inlet pipe protruding from the structure.

CPU that fits in tight spaces and survives harsh environments.

The SBC has 4 16450-compatible RS-232 serial ports. The built-in PC/104 expansion bus enables the SBC to work with standards I/O pc104 boards to control electromechanical devices of the instrument. The SBC has a fan-less operating temperature range of $-40\ ^{\circ}C$ to $+85\ ^{\circ}C$. The data acquisition circuit on board the Athena II SBC performs all the sensors readings.

In order to control the stepper motors connected to the gate valves, 2 pc-104 AIM-Motion-104 boards has been connected to the SBC. The AIM104-MOTION-1 is an 8-bit PC/104 module providing single axis motor control, using Hewlett Packard's HCTL-1100 motion controller IC. To control the pumps switch on/off a relay module pc-104 has been connected to the SBC. The DiamondSystems IR104-PBF High Density Optoisolated Input + Relay Output PC/104 Module, 20 optoisolated digital inputs and 20 relay outputs, has

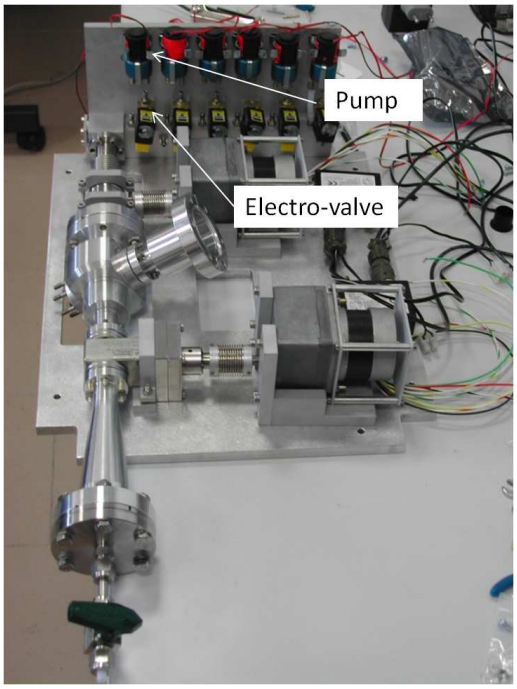

Fig. 4. DUSTER Instrument plate: pumping system mounted with pumps and electrovalves.

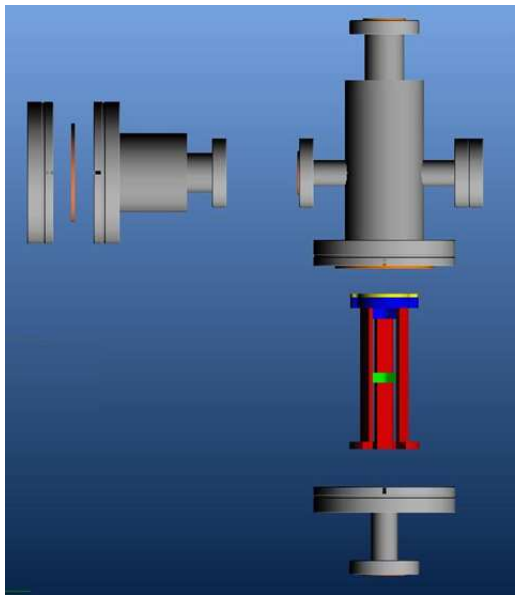

Fig. 5. Collecting Chamber parts exploded view.

been used. We designed and produced 2 custom pc104 in order to:

- Manage the 6 electrovalves of the pumping system;
- Condition thermal and power consumption sensors.

Instrument Telemetry Hardware.

An IRIDIUM 9601 SBD (Short Burst Data) Transceiver has been used to implement a telecommand/telemetry (TC/TM) system allowing operations control from ground through commanding and housekeeping data transmission. The 9601 SBD Transceiver is a low cost, Iridium Satellite LLC manufactured product, designed as an OEM module to be integrated into applications that only use the Iridium SBD service. The transceiver is connected by a serial port (RS232 interface) to the instrument main electronic boards. The 9601 is the core transceiver module required to communicate via the iridium network. Applications can readily drive the transceiver using an extended AT Command Set. The Iridium SBD service provides:

- Mobile Originated (instrument) messages up to 340 bytes;
- Low, uniform global latency (less than 1 minute)
- Mobile Terminated (experimenter) messages up to 270 bytes
- Global Coverage.

The on-board Software sends Mobile Originated SBD (MO-SBD) data messages via the Iridium Transceiver: it loads the data message into the Transceiver and instructs it to send the data message. The data message is transmitted across the Iridium satellite network to the Iridium Gateway. Then the data message is transferred via e-mail or an IP Socket to experimenter host computer system where it is stored in a database for further data processing. Mobile Terminated SBD (MT-SBD) messages are sent to the Iridium Gateway via e-mail or IP Socket from the experimenter host computer system. The Iridium Gateway sends a 'Ring Alert' to the

Transceiver when a MT-SBD message has been queued.

Instrument Sensors and Thermal control.

The atmospheric pressure sensor (but for redundancy two sensors are used) is a critical part of the electronic subsystem: it measures the barometric altitude and triggers the sampling process. The sensors HPA by Honeywell provide an absolute pressure range from 0 to 121 kPa with ±0.03% full scale accuracy, in the operating temperature range ($-40 to 85\ ^{\circ}C$).

These sensors are connected to the Athena II SBC by 2 RS 232 serial ports. A micro electro-mechanical systems (MEMS) pressure gauge sensor is connected to the pumping systems, with sensitivity of 0.1 mbar, in order to monitor the flow rate through the instrument. The thermometers used are 12 LM135 integrated circuit sensors, with a breakdown voltage directly proportional to absolute temperature ($+10\ mV/K$). When calibrated at $25\ ^{\circ}C$ the LM135 has typically less than $1\ ^{\circ}C$ error over a $100\ ^{\circ}C$ temperature range; unlike other sensors the LM135 has a linear output.

The sensors were used in conjunction with the LM134 component (3-terminal adjustable current sources) using the circuit reported in Fig.6. Heaters are mounted on the valves of the collecting chamber and on the support of the pumps: if the temperature drops below a set value the software activates the heaters to maintain the components within the operational temperature.

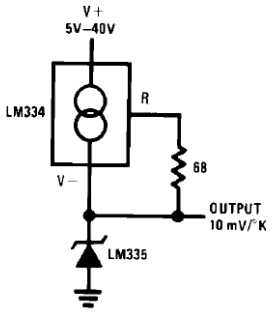

Fig. 6. Temperature sensors circuit with LM134 current source.

Instrument Software.

The on-board software allows the complete management of the instrument operations (open-close valve, switch on/off pumping system, sensors data storing and TC/TM managing). The instrument can operate in two different modes:

- Autonomous Mode;
- Slave Mode.

In the Autonomous Mode all operations to sample and collect stratospheric aerosol are handled by the software following data from instrument sensors (atmospheric pressure, temperature, battery status). At the instrument switch-on it is in the Safe Status (valves of the collecting chambers closed and pumping system switched off).

The software continuously monitors and stores the sensor readings (pressure, temperature and other housekeeping parameters); when the pressure reaches the operative value it changes the instrument to the Sampling Status: opens the valves and switches on the pumping system. The software sends, at regular time interval, sensors readings and instrument status by Iridium Transceiver. The sampling activity is triggered by the pressure readings (i.e. the balloon altitude).

If during the mission a thermal contingency, registered by sensors, occurs on critical components (main electronics) the instrument switch to the Safe Status configuration protecting the collected sampling. In Slave Mode the operation is handled by the experimenter using Telecommands. The Instrument receives TC by the Iridium Transceiver and either changes the instrument status or executes operations. The software sends, by Iridium Transceiver, sensors readings and instruments status. When a thermal contingency occurs the instrument is forced into Safe Status, in order to preserve the collected sample.

Power Supply.

The electrical power required to operate the instrument (20 W) during the sampling

phase, is guaranteed by the combination of a rechargeable battery with capacity of 20 Ah and four solar panels (27 W each). The four panels, connected in parallel to the rechargeable battery, are mounted in such a configuration that at least one them is pointed towards the sun.

4. The 2008 Flight

The first DUSTER scientific flight was held in June 2008. The Instrument was launched with a 30000 m^3 balloon from Longyearbyen (Svalbard islands, Norway) on 21st of June and was recovered after a flight of about 3 days on the west coast of Greenland (Fig.7). During the flight the instrument was in Sampling Status for 36 hours operating in the Autonomous Mode, and was able to properly handle a thermal contingency of the main electronics. The thermal and pressure data collected and stored on board are displayed in Fig.8 and Fig.9. After retrieval of the instrument 26 particles collected in the stratosphere at 37 *km* altitude were identified by field emission scanning electron microscopy (Ciucci et al. 2011).

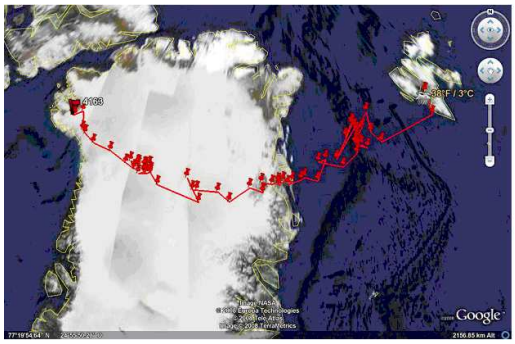

Fig. 7. DUSTER 2008 flight trajectory from Longyearbyen (Svalbard, Norway) to Thule (northwest of Greenland).

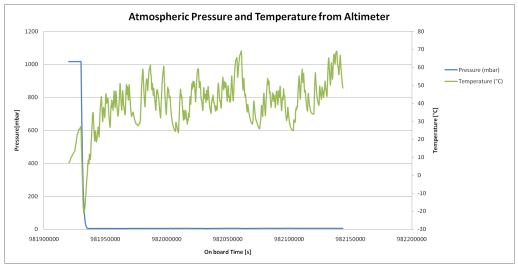

Fig. 8. Pressure and Temperature measured and stored on board by the DUSTER Altimeter during 2008 flight.

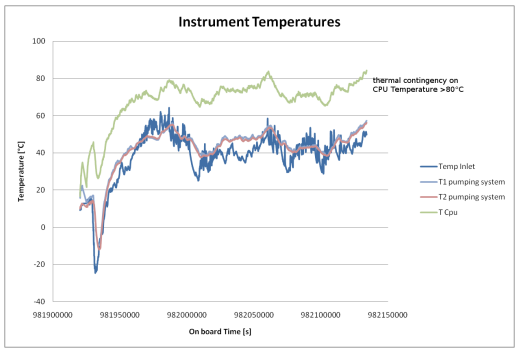

Fig. 9. Temperature measured by thermal sensors during the 2008 flight, after the thermal contingency on the CPU the instrument autonomously switch to Safe Mode.

5. Conclusions

The DUSTER instrument was developed to collect small aerosol solid particles (0.1 – 150 μm) in the upper stratosphere (about 37 km. It operated for 36 hours autonomously in a flight from Svalbard to Greenland (June 2008) sampling about 36 m^3 of atmosphere . The telecommand/telemetry system allowed the control of the instrument during the flight. The software properly managed a thermal contingency occurred to the main electronics saving the collected samples. The mechanical structure and the collecting chamber safely survived the release and landing phases.

Acknowledgements. The DUSTER project has been funded by the Italian Space Agency under contract I/015/07/0, SubTask 3350. We thank ASI for the support given during the operational flight performed within launching site verification activities.

References

Ackerman et al., 1989 J. Geophys. Res., 94, 8399

Berthet G. et al., 2002, Applied Optics, 41, 7522

Ciucci, A. et al., 2011, Memorie della Società Astronomica Italiana Supplementi, 16, 119

He S. and Carmichael G.R., 1999, J. Geophys. Res., 104, 26307

Lacis A. et al., 1992, Geophys. Res. Lett., 19, 1607

Mateshvili N. and Rietmeijer F.J.M., 2002, J. Volc. Geothermal Res., 120, 55

Mateshvili N. et al., 2005, J. Geophys. Res., 110, 1

McElroy, M. B., et al., 1986 Nature, 321, 759

Okada K. et al., 1997, J. Meteorological Soc. of Japan., 75, 753

Palumbo, P., et al. 2008, Mem. Soc. Astron. Italiana, 79, 853

Saxena V. and Yu S., 1996, J. Geophys. Res., 101, 9063

Solomon S. et al., 1996, J. Geophys. Res., 101(D3), 6713

Testa J.P. et al., 1990, Earth and Planet. Sci. Letters, 98, 287

Wang C., 2004, J. Geophys. Res., 109, 4084