ISBN: 978-3-95450-193-9 doi:10.18429/JACoW-ICALEPCS2017-TUPHA195

ESPRESSO INSTRUMENT CONTROL ELECTRONICS AND SOFTWARE: FINAL PHASES BEFORE THE INSTALLATION IN CHILE

V. Baldini†, G. Calderone, R. Cirami, I. Coretti, S. Cristiani, P. Di Marcantonio,
INAF-OATs, Trieste, Italy
D. Mégevand, OG, Versoix, Switzerland
M. Riva, INAF-OAB, Brera, Italy

Abstract

ESPRESSO, the Echelle SPectrograph for Rocky Exoplanet and Stable Spectroscopic Observations, is undergoing the final testing phases before being shipped to Chile and installed in the Combined Coudé Laboratory (CCL) at the European Organisation for Astronomical Research in the Southern Hemisphere - Very Large Telescope site (ESO-VLT).

The integration of the instrument took place at the Astronomical Observatory of Geneva. It included the full tests of the Instrument Control Electronics (ICE) and Control Software, designed and developed at the INAF - Astronomical Observatory of Trieste.

ESPRESSO is the first ESO-VLT permanent instrument whose electronics is based on Beckhoff PLCs. Two PLC CPUs shares all the workload of the ESPRESSO functions and communicates through the OPC-UA protocol with the VLT instrument control software.

In this phase all the devices and subsystems of ESPRESSO are installed, connected together and verified, mimicking the final working conditions in Chile.

This paper will summarize the features of the ESPRESSO control system, the tests performed during the integration in Europe and the main performances obtained before the integration of the whole instrument "on sky" in South America.

INTRODUCTION

ESPRESSO is the Echelle SPectrograph for Rocky Exoplanet and Stable Spectroscopic Observations of ESO that is now being installed at the Very Large Telescope site in Chile [1]. ESPRESSO aims to detect rocky exoplanets using the radial velocity method, and to search for variation of fundamental physical constants through cosmic time. To reach this goal the spectral resolution is expected to be up to 200,000.

ESPRESSO can operate with up to 4 VLT UTs (Unit Telescopes), through dedicated Front End Units (FEU).

Most of the moving parts and sensors of ESPRESSO are controlled by the Instrument Control Electronics and Software [2] [3]. All these devices are controlled by two Beckhoff PLC CPUs placed in the Instrument Main Cabinet (IMC). The CPU belongs to the CX2030 series, and supports EtherCAT fieldbus. In each CPU the OPC-UA server is installed to allow the communication with the higher level software. Several further electronics subracks, containing Beckhoff decentralized modules, are EtherCAT-linked to the two PLC CPUs in the IMC, following the daisy chain reported in Figure 1. The yellow boxes in Figure 1 represent the CPUs in the main cabinet.

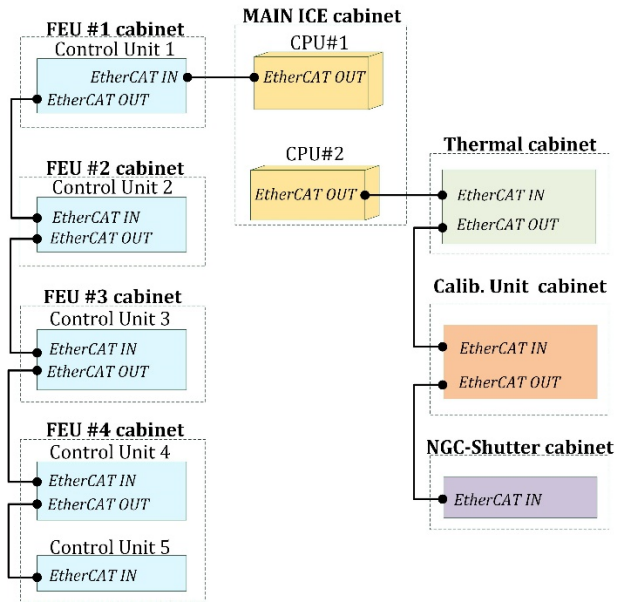

Figure 1: Beckhoff control system daisy chain.

The first CPU controls all the moving parts and sensors of the FEU, driving the Beckhoff modules placed in each FEU 1m high cabinet. These four cabinets are positioned near the FEU arm to control, as shown in Figure 2.

The second CPU controls all the functions of the other subsystems: Lakeshore temperature controllers placed in the Thermal Cabinet, motors, lamps and sensors placed in the Calibration Unit cabinet and drives the three shutters through the NGC-Shutter interface cabinet.

Figure 3 shows the 2m high cabinets: Thermal Control System cabinet (on the left), Instrument Main Cabinet (center) and Calibration Unit cabinet (on the right side). The Thermal and Calibration cabinets have been built respectively in collaboration with the Genèva Astronomical Observatory and the Bern University.

The CPU are programmed using TwinCAT 3 development software, in Structured Text, language supported by the IEC 61131-3 standard.

The ESPRESSO Control Software architecture is compliant with the ESO/VLT standards and is based on the VLT Control Software [4].

In June 2017 the PAE (Preliminary Acceptance Europe) took place at the Geneva Observatory, where the instrument has been accepted by ESO. ESPRESSO ICE and ICS

† baldini@oats.inaf.it

Content from this work may be used under the terms of the CC BY 3.0 licence (© 2017). Any distribution of this work must maintain attribution to the author(s), title of the work, publisher, and DOI.

ISBN: 978-3-95450-193-9 doi:10.18429/JACoW-ICALEPCS2017-TUPHA195

Content from this work may be used under the terms of the CC BY 3.0 licence (© 2017). Any distribution of this work must maintain attribution to the author(s), title of the work, publisher, and DOI.

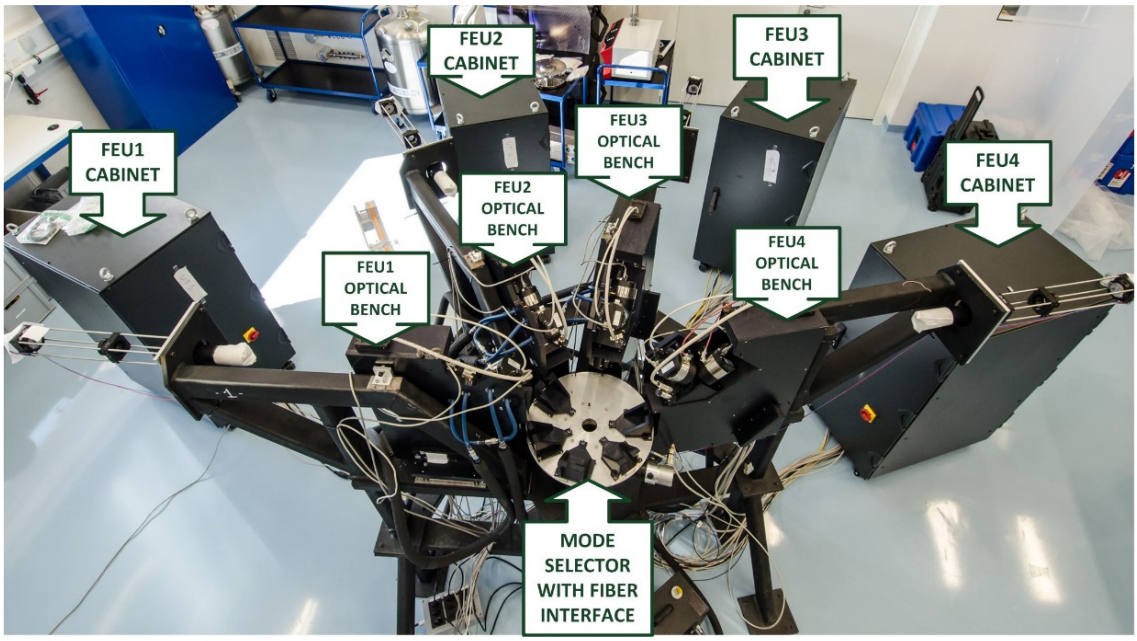

Figure 2: Front End Unit system with the ICE cabinets.



Figure 3: Thermal control cabinet (left), Instrument main cabinet (center), Calibration unit cabinet (right)were tested with all the other subsystems, satisfying the requirements.

ICE TEST PERFORMED DURING THE INTEGRATION IN EUROPE

ESPRESSO European integration phase took place till June 2017 in Geneva. During this phase, all the subsystems have been mounted and all the functionalities have been tested together. In particular, for the ICE, the following tests, which are explained in the following sections, have been carried out during integration and PAE activities:

- General functioning and conformity test
- Motion positioning verification
- Shutter-NGC interface test
- Electrical test
- EMC test

General Functioning and Conformity Test

For the PAE a visual and mechanical check of the connections in the subsystems have been performed by ESO. A visual inspection of cables, connectors and components have been made on the instrument to verify its compliance to the schematics and documentation.
Furthermore were checked:

- the correct visualization of the analog/digital sensors
- the correct behaviours of all the PLC controlled devices

These tests were performed both on the PLC-side and via ICS. It was possible to test also the system under stress-condition in order to simulate failures and visualize correctly the errors reported.

Motion Positioning Verification

The accuracy in the motor positioning is one of the main goal to reach in an instrument as ESPRESSO. Several moving parts (about 40 motors in total) are driven by the PLC, including rotational, translational and tracking stages. All the motors, except the calibration unit ones, are located in the FEU area (mainly inside each optical bench - Figure 2). The accurate positioning of all the stages allows the light to follow the correct path from the coudè tunnels to the spectrograph, by mirrors movements, tip/tilt corrections and fiber mode selector.

Figure 4 shows as example the positioning of one of the eight Atmospheric Dispersion Corrector (ADCs) stages

ISBN: 978-3-95450-193-9 doi:10.18429/JACoW-ICALEPCS2017-TUPHA195

(actual position compared to expected position). The goodness of the result is shown by the almost perfect overlapping of the two signals.

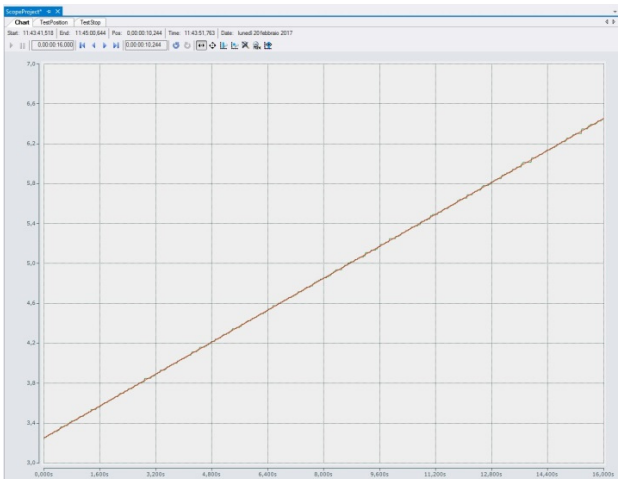

Figure 4: ADC stage (actual position compared to expected position).

Shutters-NGC Interface Test

During integration, the signal response of the shutter system after the opening command sent by the NGC was tested.

Three shutters are foreseen in ESPRESSO (one for each use mode). Their drive is actuated by the PLC but the command is sent via NGC. ICS responsibility is to select the shutter to open, and to detect the feedbacks or errors that may occur.



Figure 5: Shutter open signals jitter and timings.

In Figure 5 the following signals during the opening of the shutter are shown all with positive logic (active high):

- Yellow – NGC shutter open command signal (input to PLC)
- Magenta – Selected shutter drive signal (output from PLC)
- Green – Selected shutter feedback /Sync signal (input to PLC)
- Cyan – NGC Shutter open status signal (output from PLC)

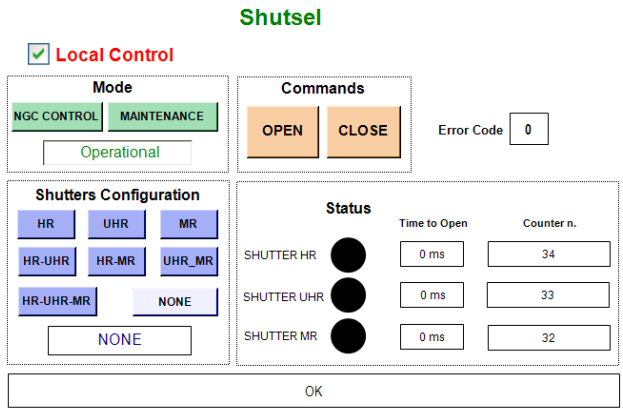

Figure 6: Shutters control panel.

The signals have been monitored on an oscilloscope. The oscilloscope was triggered by the NGC shutter open command (output on the NGC – input on PLC) and is set for long persistence, measuring multiple opening sequences to show the jitter of the signals due to the PLC cycle granularity of 1 msec.

The jitters introduced by the PLC can be clearly seen and the shutters timings are compliant to the manufacturer specifications.

Tests on the shutter system were also made using the visualization control panel (see Figure 6), specially designed and available also in the touch control panel installed in the IMC.

The purpose of this panel is to control up to three shutters also without the Control Software or NGC intervention.

In this visualization also the feedback status is shown, as the time of opening, the number of openings during each shutter life, and if an error occurred.

Electrical Test

On the electrical side the following tests were performed:

- at the IMC cabinet two SELCO alarm annunciators are installed. On one cabinet at a time, a power loss has been simulated by switching it off. An alarm was triggered as a result and the associated channel on the annunciator was lit.
- the cabinets power consumption declared in the documentation were verified connecting a power meter in series on the power line and configuring it for peak power measurement.
- Under-voltage protection was tested by turning off the main switches of the cabinets. The voltage failure was detected as expected and the power restored.
- also the over-temperature of the cabinets was successfully tested.

Content from this work may be used under the terms of the CC BY 3.0 licence (© 2017). Any distribution of this work must maintain attribution to the author(s), title of the work, publisher, and DOI.

ISBN: 978-3-95450-193-9 doi:10.18429/JACoW-ICALEPCS2017-TUPHA195

Content from this work may be used under the terms of the CC BY 3.0 licence (© 2017). Any distribution of this work must maintain attribution to the author(s), title of the work, publisher, and DOI.

EMC Test

Finally, the Electro Magnetic Compatibility (EMC) tests were performed by ESO. These included a conducted emission test in the range from 150 kHz to 30 MHz, radiated RF field emission test in the range from 30 MHz to 1 GHz, electrostatic discharge test, surge test on power supply lines and a partial radiated RF field immunity test. The results showed that the instrument is compliant with the requirements.

SOFTWARE TEST PERFORMED DURING THE INTEGRATION IN EUROPE

During the implementation and integration phase ESPRESSO took advantage of the new continuous integration build and test infrastructure developed at ESO, based on Jenkins. Every night the source code is checked out from the SVN repository, and the whole build procedure and the suite of automatic tests are executed at ESO premises. Hence, all the ESPRESSO Control Software functionalities have been extensively tested, in particular the Observation Software (OS) for the observation coordination, the Instrument Control Software (ICS) for the low level device control, the Detector Control Software (DCS) for the scientific detectors control, and the whole suite of calibration and maintenance templates. Particular attention has been paid to a careful design of the ESPRESSO software libraries in the framework of VLT software, in order to avoid functionality duplications and maximize code reusing. Such design allow to run the continuous integration tests with nearly 100% code coverage (the acquisition and observation templates cannot be run automatically since they require user interaction), and allow to quickly identify and solve any possible problem occurring during the tests. It also ensure that the ESPRESSO software core functionalities (i.e. communication among processes, logging facilities, command sequences, device and telescope interfaces) are used several times from different templates, ensuring their robustness.

Moreover, during the PAE process, a complete suite of automatic test procedures have been executed and successfully passed in order to certify that the instrument has completed the implementation phase and is ready for the commissioning at Paranal. Finally, a sub-set of the software tests has also been executed in the VLT Control Model in ESO/Garching, to assess the compatibility with the VLT Telescope Control Software and the Data Flow Software (Archive, Observation Handling Tool).

CONCLUSION

ESPRESSO successfully passed the Preliminary Acceptance Europe, where each subsystem has been fully tested together. The Instrument Control Electronics passed through specific tests like functioning tests, electrical tests, EMC verification and motor positioning accuracy verification.

The Instrument Control Software has foreseen functionalities test, in particular for the OS, ICS and DCS modules. The tests have been performed during the integration in Geneva, during the PAE by ESO, or, when possible, during the firsts commissioning of the Coudè Trains subsystems in Chile and no particular problems emerged. All the tests showed the correct behaviour of the instrument, both in normal and in failure conditions. Final test will be done at the VLT site during the Chile integration in autumn to prepare ESPRESSO for its first light.

REFERENCES

[1] F. Pepe, V. Baldini *et al.*, "ESPRESSO – An Echelle SPectrograph for Rocky Exoplanets Search and Stable Spectroscopics Observations", *The Messenger*, ESO, vol. 153, p. 6-16, 2013.

[2] V. Baldini *et al.*, "ESPRESSO Instrument Control Electronics: a PLC based distributed layout for a second generation instrument", ESO VLT, Montréal, Canada, SPIE2014, *Software and Cyberinfrastructure for Astronomy III*, Volume 9152, 915228

[3] V. Baldini *et al.*, "The Instrument Control Electronics of ESPRESSO Spectrograph", VLT, in *Proc. ICALEPCS'15*, Melbourne, Australia.

[4] R. Cirami *et al.*, "An OPC-UA based architecture for the control of the ESPRESSO spectrograph", VLT, in *Proc. ICALEPCS'13*, San Francisco, USA.