

Adaptive Optics for Extremely Large Telescopes 4 – Conference Proceedings

Peer Reviewed

Title:
SHARK-NIR Channel: a high contrast imager with coronagraphic capabilities for the Large Binocular Telescope

Journal Issue:
Adaptive Optics for Extremely Large Telescopes 4 – Conference Proceedings, 1(1)

Author:
Farinato, Jacopo, INAF - OAPD
Baffa, Carlo, INAF - Arcetri
Baruffolo, Andrea, INAF - Padova
Bergomi, Maria, INAF - Padova
Carbonaro, Luca, INAF - Arcetri
Carolo, Elena, INAF - Padova
Carlotti, Alexis, IPAG
Centrone, Mauro, INAF - Monte Porzio
Close, Laird, University of Arizona
De Pascale, Marco, INAF - Padova
Dima, Marco, INAF - Padova
Esposito, Simone, INAF - Arcetri
Fantinel, Daniela, INAF - Padova
Farisato, Giancarlo, INAF - Padova
Gaessler, Wolfgang, MPIA
Giallongo, Emanuele, INAF - Monte Porzio
Greggio, Davide, INAF - Padova
Guyon, Olivier, University of Arizona
Hinz, Philip, University of Arizona
Lisi, Franco, INAF - Arcetri
Magrin, Demetrio, INAF - Padova
Marafatto, Luca, INAF - Padova
Pedichini, Fernando, INAF - Monte Porzio
Pinna, Enrico, INAF - Arcetri
Puglisi, Alfio, INAF - Arcetri
Ragazzoni, Roberto, INAF - Padova
Salasnich, Bernardo, INAF - Padova
Stangalini, Marco, INAF - Monte Porzio
Vassallo, Daniele, INAF - Padova
Verinaud, Christophe, IPAG
Viotto, Valentina, INAF - Padova

Publication Date:
2015

Permalink:
http://escholarship.org/uc/item/7fr068zd

eScholarship
University of California

eScholarship provides open access, scholarly publishing services to the University of California and delivers a dynamic research platform to scholars worldwide.

DOI:
http://dx.doi.org/10.20353/K3T4CP1131635

Keywords:
planet finding, coronagraphs, pyramid sensor, adaptive secondary, extreme adaptive optics, large binocular telescope

Local Identifier:
ao4elt4_31635

Abstract:
A new coronagraphic instrument for the Large Binocular Telescope (LBT) has successfully passed the conceptual design phase. SHARK-NIR channel will be installed in one arm of the Large Binocular Telescope and it is designed to use different coronagraphic techniques, both to match as much as possible the different requirements of the different science cases and to explore the capabilities of such techniques for the next-generation of ELTs. By exploiting the combination with SHARK-VIS channel mounted at the other LBT arm, the instrument will offer simultaneous coronagraphic observations at different wavelengths, characterized by high contrast, even for relatively faint targets. This will be achievable thanks to the very efficient Adaptive Optics (AO) systems already operating at LBT (First Light AO, FLAO). Furthermore, the latter will be soon upgraded with new detectors, promising even better performance in terms of limiting magnitude. In this paper we present the status of the SHARK-NIR channel design.

Copyright Information:
All rights reserved unless otherwise indicated. Contact the author or original publisher for any necessary permissions. eScholarship is not the copyright owner for deposited works. Learn more at http://www.escholarship.org/help_copyright.html#reuse



eScholarship
University of California

eScholarship provides open access, scholarly publishing services to the University of California and delivers a dynamic research platform to scholars worldwide.

SHARK-NIR Channel: a high contrast imager with coronagraphic capabilities for the Large Binocular Telescope

Jacopo Farinato[*a], Carlo Baffa[b], Andrea Baruffolo[a], Maria Bergomi[a], Luca Carbonaro[b], Elena Carolo[a], Alexis Carlotti[c], Mauro Centrone[d], Laird Close[e], Marco De Pascale[a], Marco Dima[a], Simone Esposito[b], Daniela Fantinel[a], Giancarlo Farisato[a], Wolfgang Gaessler[f], Emanuele Giallongo[d], Davide Greggio[a,g], Olivier Guyon[e], Philip Hinz[e], Franco Lisi[b], Demetrio Magrin[a], Luca Marafatto[a,g], Fernando Pedichini[d], Enrico Pinna[b], Alfio Puglisi[b], Roberto Ragazzoni[a], Bernardo Salasnich[a], Marco Stangalini[d], Daniele Vassallo[a,g], Christophe Verinaud[c], Valentina Viotto[a]

[a]INAF Padova, Vicolo dell'osservatorio 5, 35122, Padova, Italy; [b]INAF Arcetri, Largo Enrico Fermi, 5, 50125 Firenze, Italy; [c]Institut de Planétologie et d'Astrophysique de Grenoble, 414, Rue de la Piscine, Domaine Universitaire, 38400 St-Martin d'Hères (France);
[d]INAF Roma, Via di Frascati 33, 00040 Monte Porzio Catone, Italy; [e]University of Arizona, Department of Astronomy/Steward Observatory, 933 North Cherry Avenue, Tucson, AZ, USA;
[f]Max Planck Institute for Astronomy, Königstuhl 17, 69117 Heidelberg, Germany; [g]Università di Padova, Dipartimento di Fisica e Astronomia, Vicolo dell'Osservatorio 3, 35122, Padova, Italy

ABSTRACT

A new coronagraphic instrument for the Large Binocular Telescope (LBT) has successfully passed the conceptual design phase. SHARK-NIR channel will be installed in one arm of the Large Binocular Telescope and it is designed to use different coronagraphic techniques, both to match as much as possible the different requirements of the different science cases and to explore the capabilities of such techniques for the next-generation of ELTs. By exploiting the combination with SHARK-VIS channel mounted at the other LBT arm, the instrument will offer simultaneous coronagraphic observations at different wavelengths, characterized by high contrast, even for relatively faint targets. This will be achievable thanks to the very efficient Adaptive Optics (AO) systems already operating at LBT (First Light AO, FLAO). Furthermore, the latter will be soon upgraded with new detectors, promising even better performance in terms of limiting magnitude. In this paper we present the status of the SHARK-NIR channel design.

Keywords: planet finding, coronagraphy, pyramid sensor, adaptive secondary, extreme adaptive optics, large binocular telescope

1. INTRODUCTION

SHARK is an instrument proposed for LBT in the framework of the *"2014 Call for Proposals for Instrument Upgrades and New Instruments"*. It is composed by two channels, a visible and a near infrared arm, to be installed one for each LBT telescope arm, and it will exploit, in its binocular fashion, unique challenging science from exoplanet to extragalactic topics with simultaneous spectral coverage from R to H band, taking advantage of the outstanding performances of the binocular XAO LBT capability (see [1] and [2]).
The NIR channel has successfully passed the Conceptual Design Review (CDR) in December 2015, and it is now in the final design phase study.
The initial motivation for SHARK resides in the idea of building an instrument that can take full advantage of the LBT eXtreme AO (XAO) system, exploiting a strong science case, which requires such an extreme correction.

[*]jacopo.farinato@oapd.inaf.it

Coronagraphy is the direction toward which several astronomical facilities in the world are strongly pushing, both because the performances of the AO systems today available are reaching excellent correction and because the science case is indeed very interesting.
Also considering the international scenario, a coronagraphic instrument in the LBT framework looks to be a favorable choice.
In fact, SPHERE (Spectro-Polarimetric High-contrast Exoplanet RE-search instrument for the VLT, see [3]), GPI (Gemini Planet Imager, see [4]) and MagAO (Magellan AO, see [5]) are operating in the Southern Hemisphere.
In the Northern Hemisphere, the two main competitors are SCExAO (the Subaru Coronagraphic Extreme Adaptive Optics, see [6]) and Palm-3000 (Palomar AO, see [7]), both of them already operating on sky (see [8] and [9]) with initial performance far from the one obtained at LBT, especially when going to faint targets. Considering that SCExAO is upgrading its AO system by implementing a pyramid WaveFront Sensor (see [10]) and a 2000 actuators deformable mirror (DM, see [11]), it will most probably be the only competitor of SHARK.
Also in the LBT scenario, SHARK-NIR is quite complementary with the other instruments currently installed at LBT or foreseen in the near future, completing LUCI, for the direct imaging science cases where an extreme Strehl Ratio (SR) is required, and LMIRCam, for the coronagraphic cases at wavelengths (J and H) shorter than the ones normally operated (L and M).
On the other side, the direct imaging and spectroscopic observations of LUCI in K-Band and the coronagraphic observations of LMIRCam in L (and possibly in K) band are very important to fully exploit the SHARK-NIR science cases. In fact, above all for the AGN/QSO and Jets/Disks cases, it is needed to complement the observations in H-Band looking at H2 molecular features (the strongest line is at 2.12 μm, K-Band) in coronagraphic mode.
All these reasons pushed to propose SHARK-NIR as a new instrument for LBT, in a configuration which is actually a little different from the one initially described in the 2014 call. The current design does not reach K band anymore and assumes a smaller FoV but, on the other hand, it is more flexible in terms of the coronagraphic techniques that may be implemented. In fact, the new double pupil stage setup allows to implement also coronagraphic techniques using apodizing masks.
In this article, we will briefly describe the SHARK-NIR instrument in its current look, just before the final shaping that will happen during the final design phase study.

2. SHARK-NIR SCIENCE CASE

The direct detection of extrasolar planets is one of the most exciting goals of SHARK-NIR. In fact, the resolution achievable with a 10-m class telescope allows to access, in the NIR domain, gaseous giant planets of Jupiter size or bigger, which still is a very challenging task to be achieved, due to the very high contrast and vicinity to the hosting star required. There are several scientific goals to be possibly exploited in the exo-planet science case, ranging from the direct detection of unknown giant planets, to the follow up of known planets (through spectroscopic and photometric characterization).They require of course the implementation of a spectroscopic mode with modest spectral resolution that is currently foreseen in SHARK-NIR through a long slit positioned into the intermediate focal plane.
But the science to be exploited with SHARK-NIR is definitely not only limited to the exo-planets case. In fact, the study of proto-planetary disks is fundamental to comprehend the formation of our own solar system as well as of extrasolar planetary systems. To understand how matter aggregates to form the building blocks of planetary bodies, there is the need to investigate not only the evolution of the disk itself, but also the role of jets in shaping its structure. This requires observing the system at high angular resolution as close as possible to the parent star, occulting its light to enhance the area where the interplay between the accretion and ejection of matter dominates the dynamics.
Other very interesting and challenging topics can be found in the extragalactic science, where the capabilities of SHARK-NIR in terms of spatial resolution and contrast enhancement may be applied to study the AGN-host relations as well as Dumped Ly-α systems (DLAs), to constrain the Black Hole feeding mechanism and to trace, in bright quasars, molecular outflows powerful enough to clean the inner kilo-parsec and quench the star formation.
There is anyhow an important feature of the LBT AO which, exploited in the proper way, may give to SHARK-NIR the possibility to explore unique coronagraphic science. The Pyramid WFS has a demonstrated gain in sensitivity compared to other WFSs commonly used, such as the Shack-Hartmann. This fact gives to the LBT AO systems the capability to achieve high SR (of the order of 70%) at moderately faint magnitude (R~12 or even occasionally fainter, depending on the observing conditions), as it is shown in the impressive collection of FLAO results reported in Figure 1.

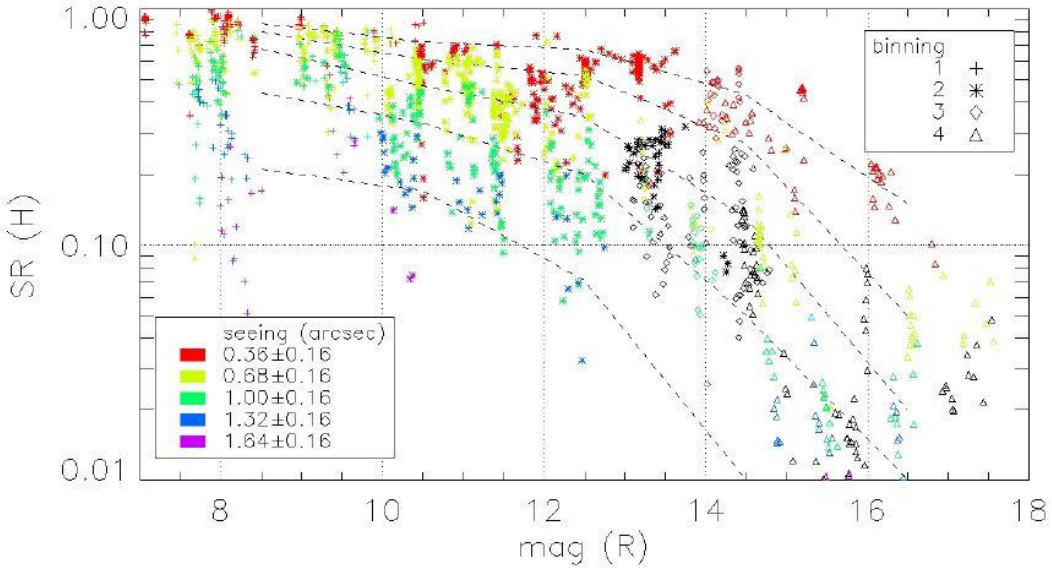

Figure 1: a summary of the FLAO performance obtained in H band with different observing conditions

This excellent performance will be further enhanced with the implementation of the AO upgrade SOUL (**S**ingle Conjugated Adaptive **O**ptics **U**pgrade for **L**BT), as it is shown in Figure 2, where, depending on the CCD choice, the capability of achieving SRs as high as 70% can be pushed to star magnitudes up to 13.5, and it has to be emphasized that these curves have been computed in non-excellent seeing conditions (0.8").

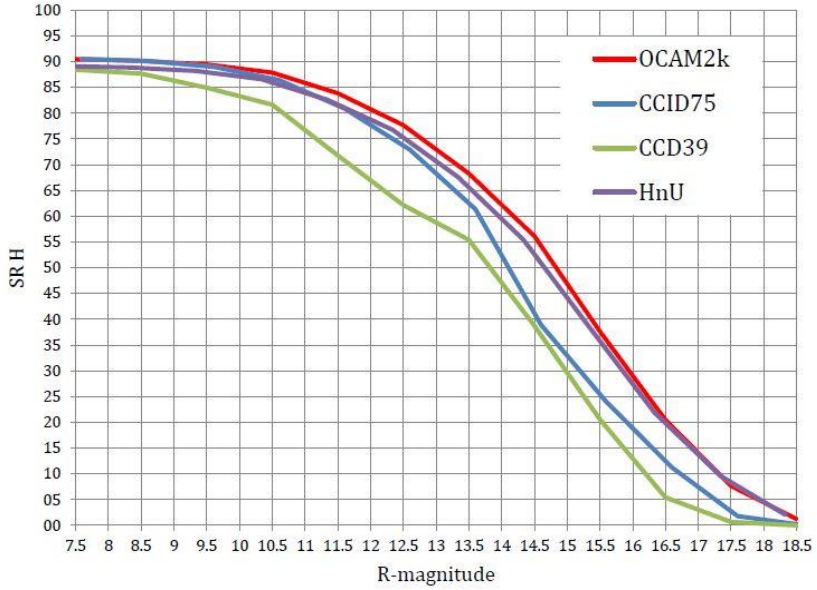

Figure 2: the SOUL improvement in the LBT AO performance (the current is in green line) with different CCD choices, computed with a seeing of 0.8"

This performance will open the field of high-contrast AO coronagraphic imaging to stars much fainter than required by other coronagraphic instruments, allowing deep search for planets around targets like, e.g., M dwarfs in nearby young associations and solar type stars in nearby star-forming regions (Taurus-Auriga at 140 pc). Also in the extragalactic field, the sample of AGN and, above all, of Quasars to be explored will go from a few tenths to a few hundreds, changing the perspective of the science to be achieved. This is definitely the characteristic that may give to SHARK-NIR unique opportunities in the coronagraphic instrument scenario.

3. SHARK AT THE TELESCOPE

The basic idea is to have the two SHARK channels installed one for each LBT arm. In fact, SHARK might be installed at the entrance foci of LBTI (LBT Interferometer?), as it is shown in Figure 3, using two deployable dichroics to feed the two SHARK channels. In this way, on the VIS side, the IR light is totally transmitted to LBTI, while on the NIR side, only the wavelengths higher that K band would reach the LBTI focus. The dichroics may be positioned just before the entrance window of LBTI, the latter transmitting the IR light to the interferometric focus and reflecting the VIS light to the Pyramid WFS. Such a dichroic, on the VIS channel would pick-up only a certain amount (to be decided) of the VIS light, to feed with the rest the WFS, while on the NIR channel would pick up up only the J, H and K bands, letting all the visible light and the wavelength higher than K go through. With this setup, SHARK will provide possible contemporary observations from R to K bands. Such a flexible configuration with several combined binocular observing modes is reflecting the request coming from the principal science cases, for which simultaneous observations in the VIS and NIR domain are required. In the following we show the conceptual opto-mechanical study of the NIR channel.

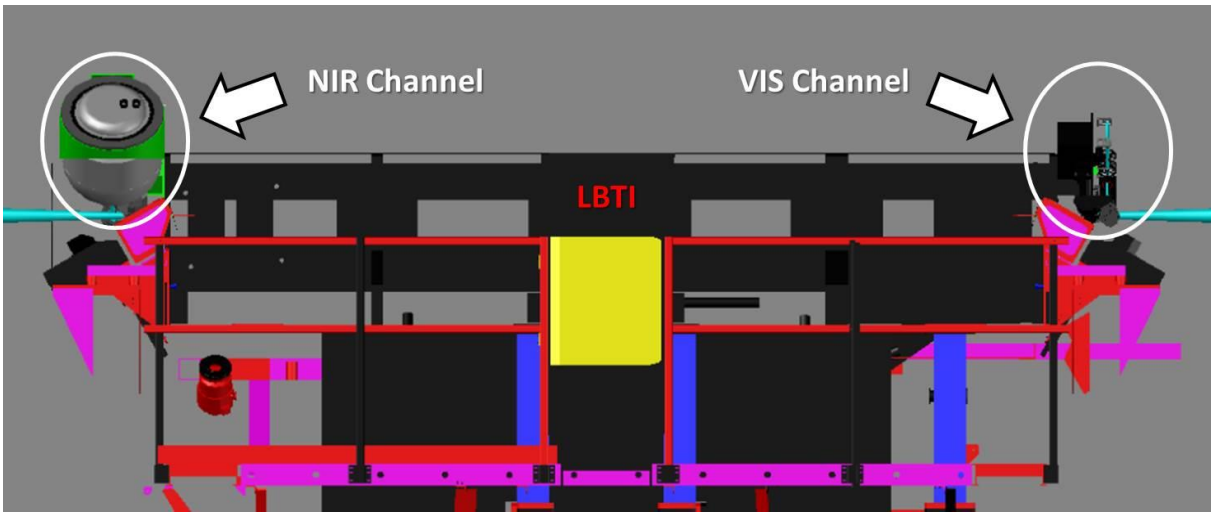

Figure 3: a possible installation of the two SHARK channels at the LBTI entrance foci

4. SHARK-NIR INSTRUMENT DESCRIPTION

The basic idea of SHARK-NIR is a camera for direct imaging coronagraphy and spectroscopy, using the corrected wavefront provided by the LBT Adaptive Secondary Mirror (ASM), operated through one of the existing AO WFS.
A very suitable position for the installation of SHARK-NIR, as already mentioned, is at the entrance of LBTI (see Figure 3 and Figure 4), very close to the WFS that is dedicated to LBTI itself, which should be used to sense and drive the ASM, providing the corrected wavefront to SHARK-NIR. A dichroic mirror, deployable in front of the entrance window of LBTI, shall pick-up and re-direct the wavelength range between 1 and 1.7 microns toward SHARK-NIR, letting the VIS light go to the WFS.
Being SHARK-NIR also a coronagraphic instrument, the camera has to be designed to accomplish an extreme performance, ideally not to decrease the correction provided by the AO system. In fact, all the coronagraphic techniques that may be implemented need a SR as high as possible to provide very good contrast. This requires optics machined to a state of the art technology and polished to nanometric level of roughness, properly aligned and installed on very robust mounts. The whole instrument mechanics has to be very stiff and designed to minimize the effects of flexures.
Additionally, to maintain the performance as good as possible at every observing altitude, it is necessary to implement an atmospheric dispersion corrector (ADC) to compensate for the atmospheric dispersion. Some of the foreseen science cases need to perform the field de-rotation, to accomplish which the whole instrument has to be mounted on a mechanical bearing.
A NIR camera, based on an Teledyne H1RG detector, cooled at about 80°K to minimize the thermal background, will provide a FoV of the order of 15”x15”, with a plate scale foreseeing a bit more than two pixels on the diffraction limit PSF at 1µm.

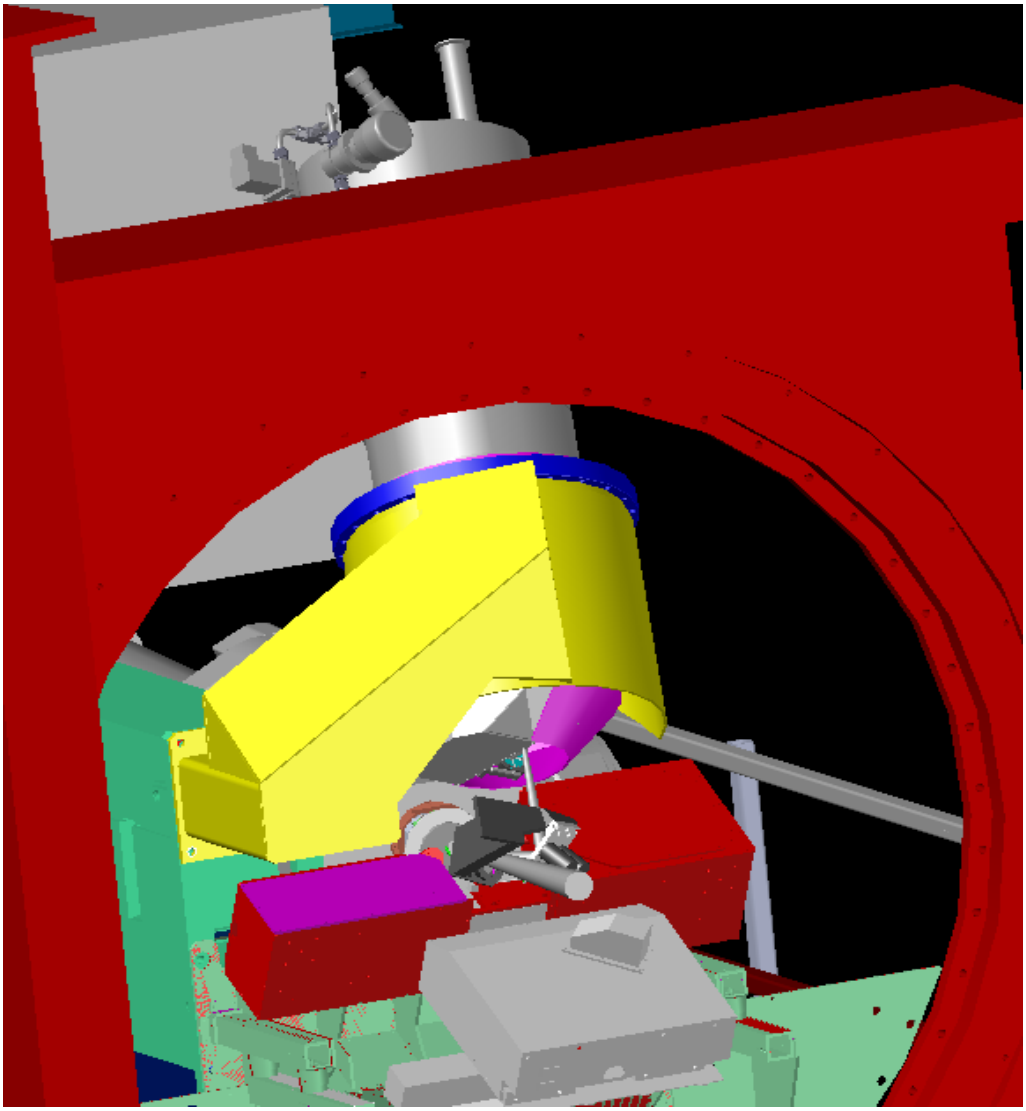

Figure 4: the SHARK-NIR instrument positioned at the entrance of LBTI

A few subsystems have been introduced in the instrument design with the purpose of optimizing the instrument performance.

For the non-common path aberrations (NCPA) minimization, a local DM has been introduced into the first pupil plane, allowing a local removal of the aberrations. The same DM, used in Tip-Tilt (T-T) fashion, may be used to correct undesired PSF movements during a scientific exposure. The latter correction requires a dedicated T-T sensor, which has been placed after the first pupil plane, into the collimated beam (a beam splitter will pick-up few percent of the light and will send it to the sensor).

The new non-cryogenic design of SHARK-NIR leaves more volume available to the optical bench, allowing creating an additional intermediate pupil plane, permitting to consider coronagraphic techniques which require apodizing masks, such as the Apodized Pupil Lyot Coronagraph (APLC). Between the DM and the beam splitter feeding the T-T sensor, a filter wheel positioned at 50mm from the pupil plane carries the apodizing masks. These kinds of masks are normally placed exactly into the pupil plane, which is occupied by the DM in our design. We have carefully evaluated the impact of having the masks slightly displaced with respect to the pupil plane, and it turned out that the effect is basically negligible if the masks are designed to take this fact into account.

As we mentioned at the beginning of this section, SHARK-NIR has essentially three observing modes, described in the following.

4.1 Direct Imaging Mode

In this observing mode, SHARK-NIR will provide an unobstructed FoV of 15.3"x15.3", with a correction which is nominally nearly perfect over the full 15.3" diameter (SR>99.5% at 1μm). Even considering very relaxed tolerances for the alignment of the optical elements (±200μm for the off-axis parabola decenter, ±3' for their tilt), the final performance is very good (SR>97.5% at 1μm, over the full 15.3" diameter).
Even with the ADC inserted (which is deployable, to have the best possible optical quality when observing at small zenithal angles), the optical performance remains very good, ensuring for example, at a zenithal distance of 50°, an on-axis SR >96%, while at the detector corner (at the edge of the field diagonal) it decreases to ~92%.

4.2 Coronagraphic Mode

The current design of SHARK-NIR foresees two intermediate pupil and focal planes, with the purpose of implementing a large variety of coronagraphic techniques, including the ones that require the pupil apodization, such as the APLC. We have carefully evaluated which techniques may be worth of being implemented, considering both the characteristics of the most diffused coronagraphs and the LBT AO situation, and we have selected four techniques to be considered and analyzed through a simulation code that we have developed. The techniques are:

- Lyot, which requires an occulting mask into the 1st focal plane and a pupil stop on the 2nd pupil plane
- Gaussian Lyot, which requires a gaussian stop into the 1st focal plane and a pupil stop on the 2nd pupil plane
- Shaped Pupil, which requires an apodizing mask into the 1st pupil plane and an occulting mask into the 1st focal plane
- APLC, which requires an apodizing mask into the 1st pupil plane, an occulting mask into the 1st focal plane and a pupil stop into the 2nd pupil plane

All these techniques have the purpose to dim (ideally cancel) the light of the central star, in a way to enhance the contrast in the vicinity of the star itself, allowing to detect much fainter companions (exo-planets case for example) or to explore the morphology of the object under study (Jets/Disks case and AGN/QSO case). They are characterized by different operating distances from the central star (Inner Working Angle, IWA), different contrast that can be reached at a certain distance, different throughput and different FoVs.
Ideally, a few of these techniques will be implemented, in a way to fulfill as much as possible the different needs of the different science cases, and to provide a useful tool to select the proper technique for the observations.

4.3 Spectroscopic Mode

A Long-Slit Spectroscopic (LSS) coronagraphic mode will be implemented in SHARK-NIR, with two different resolutions: a low-resolution mode (R~ 100), in order to observe faint targets, and a medium-resolution mode (R~1000) to get spectral information for the brightest objects.
In fact, in the focal plane wheel (the one carrying the occulting masks defining the coronagraphic IWA), four positions will be dedicated to long slits: two orthogonal masks providing the low spectral resolution (the baseline is a dispersing prism), and two other orthogonal slits providing the medium spectral resolution (the baseline is a grism). The implementation of two orthogonal slits for each spectral resolution is necessary to properly orient the mask on the target (a known planet, for example), considering that we have a max bearing rotation of 185°, and to ensure a minimum residual derotation of 90° for the observation (corresponding to about 40 minutes of exposure at 5° of zenithal distance, without changing to the perpendicular slit).

5. THE OPTO-MECHANICAL CONCEPT

In this section we give an overview of the opto-mechanical design of SHARK-NIR, showing the main subsystems of the instrument, and recalling its main characteristics. The instrument is designed to operate in the wavelength range going from 1μm to 1.7μm.

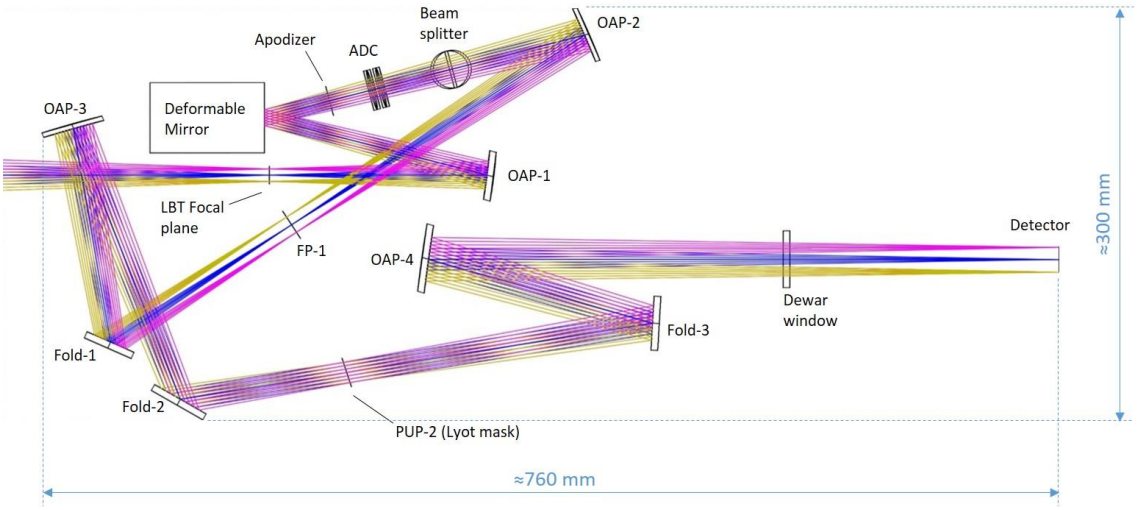

Figure 5: the optical design of SHARK-NIR

The optical design is shown in Figure 5, the full circular FoV is of the order of 15" (~21.5" on the diagonal), and the main characteristics are the following:

- An off-axis parabola (OAP-1) is creating a pupil plane of about 12mm of diameter onto the DM. A possible local DM to be used has already been identified, the ALPAO 97-15, characterized by a maximum pupil size of 13.5mm in diameter, by 97 actuators (normally the NCPA correction is limited to the first 15-20 modes), a large PtV stroke of the actuators of about 40-60µm and a bandwidth of about 750Hz.
- A filter wheel will select between different apodizing masks, positioned 50mm after the pupil plane.
- Immediately after, in the collimated beam, the ADC is placed.
- The ADC is deployable, in a way to optimize the system performance at observing altitudes that do not require the correction (normally for zenithal distances smaller than 25°-30°).
- Between the ADC and the second off-axis parabola (OAP-2), a beam splitter is placed to send a small portion of the light (~5%) to a very simple tip-tilt sensor (which is placed in vertical position with respect to the plane of the drawing), composed of a lens and a commercial detector sensitive to J band. The T-T sensor gives the advantage to monitor (at low frequency, once every minute for example) possible drifts of the spot during a single exposure, to be then compensated with the local DM, ensuring in this way to maintain the proper mask alignment.
- OAP-2 is refocusing the beam on an intermediate focal plane (FP-1), where a filter wheel can select between different occulting masks (10 positions are foreseen). The same wheel accommodates a couple of low spectral resolution grism (R~100 and R~1000) to perform spectral characterization of the science targets.
- After a folding mirror, a third off-axis parabola (OAP-3) is creating the 2nd re-imaged pupil plane, where a filter wheel (9 positions foreseen) can select between different pupil stops used to properly mask the spiders and the secondary mirror, to minimize diffraction effects. On the same collimated beam, two additional filter wheels (positioned between the pupil plane and a folding mirror, Fold-3) will allow the insertion of seven scientific filters each. They both have eight positions.
- After a folding mirror, the fourth off-axis parabola (OAP-4) is creating the final focal plane onto the detector, where the diffraction limit PSF is Nyquist sampled at 1µm. A deployable small optical group, not shown in Figure 5, can be inserted between OAP-4 and the cryostat window, with the purpose to create an image of the pupil onto the detector, which can be used before each scientific exposure to properly calibrate and compensate pupil shifts.

The whole bench is installed on a mechanical bearing, allowing the field rotation whenever required from the science cases.

The entrance window of the camera dewar is kept at 200mm of distance from the detector, being 180mm the minimum length of the baffle which has to be implemented in front of the camera to minimize the thermal background.

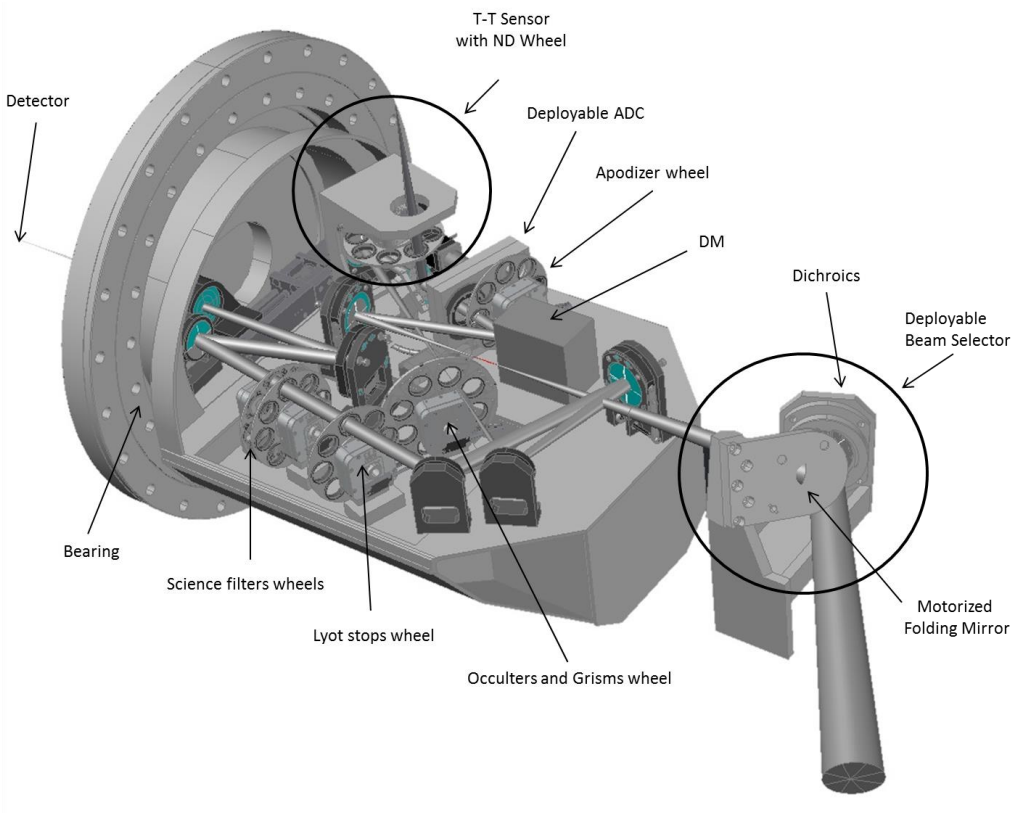

Figure 6: the opto-mechanical concept of the SHARK-NIR optical bench

The camera (not shown in the 3-D view of Figure 6) is Cryogenic, and will be using an HAWAII I detector. The LN2 tank shall ensure a hold time of about 28 hours.

6. CONCLUSIONS

SHARK-NIR is an instrument designed for high contrast imaging that will exploit the extreme adaptive optics correction provided by the Pyramid based LBT AO systems. As described, three observing modes will be implemented: direct imaging, coronagraphic imaging and spectroscopy. This flexibility will allow to take full advantage of the LBT binocular capabilities and will give clear opportunities to obtain primary science goals, in combination with the excellent LBT AO performance and also in synergy with other LBT instruments designed for very high contrast imaging, such as LMIRCam.

Furthermore, the SOUL upgrade will improve even more the performance of the AO systems, increasing the speed of the adaptive secondary mirrors and increasing the WFSs sensitivity using L3-CCDs. As shown in Section 2, we expect 1-2 magnitude fainter targets to be reachable with respect to other similar instruments.

The impact on the SHARK-NIR science would then be clear, allowing LBT to observe, in the NIR domain, many more nearby small mass stars and solar type stars in nearby star-forming regions (e.g. Taurus at 140 pc), complementing somehow the surveys of SPHERE and GPI.

REFERENCES

[1] Esposito, S.; Riccardi, A.; Fini, L.; Pinna, E.; Puglisi, A.; Quiros, F.; Xompero, M.; Briguglio, R.; Busoni, L.; Stefanini, P.; Arcidiacono, C.; Brusa, G.; Miller, D.; "LBT AO on-sky results", AO4ELT 3 conf. (2011)

[2] Esposito, S.; Riccardi, A.; Pinna, E.; Puglisi, A. T.; Quirós-Pacheco, F.; Arcidiacono, C.; Xompero, M.; Briguglio, R.; Busoni, L.; Fini, L.; Argomedo, J.; Gherardi, A.; Agapito, G.; Brusa, G.; Miller, D. L.; Guerra Ramon, J. C.; Boutsia, K.; Stefanini, P.; "Natural guide star adaptive optics systems at LBT: FLAO commissioning and science operations status", SPIE 8447 (2012)

[3] Beuzit, J.-L.; Boccaletti, A.; Feldt, M.; Dohlen, K.; Mouillet, D.; Puget, P.; Wildi, F.; Abe, L.; Antichi, J.; Baruffolo, A.; Baudoz, P.; Carbillet, M.; Charton, J.; Claudi, R.; Desidera, S.; Downing, M.; Fabron, C.; Feautrier, P.; Fedrigo, E.; Fusco, T.; Gach, J.-L.; Giro, E.; Gratton, R.; Henning, T.; Hubin, N.; Joos, F.; Kasper, M.; Lagrange, A.-M.; Langlois, M.; Lenzen, R.; Moutou, C.; Pavlov, A.; Petit, C.; Pragt, J.; Rabou, P.; Rigal, F.; Rochat, S.; Roelfsema, R.; Rousset, G.; Saisse, M.; Schmid, H.-M.; Stadler, E.; Thalmann, C.; Turatto, M.; Udry, S.; Vakili, F.; Vigan, A.; Waters, R.; "Direct Detection of Giant Extrasolar Planets with SPHERE on the VLT", ASP Proc. 430, 231 (2010)

[4] Macintosh, B. A., Graham, J. R., Palmer, D. W., Doyon, R., Dunn, J., Gavel, D. T., Larkin, J., Oppenheimer, B., Saddlemyer, L., Sivaramakrishnan, A., Wallace, J. K., Bauman, B., Erickson, D. A., Marois, C., Poyneer, L. A., and Soummer, R., "The Gemini Planet Imager: from science to design to construction," Proc. SPIE 7015, 31 (2008).

[5] Close, L. M.; Males, J. R.; Kopon, D. A.; Gasho, V.; Follette, K. B.; Hinz, P.; Morzinski, K.; Uomoto, A.; Hare, T.; Riccardi, A.; Esposito, S.; Puglisi, A.; Pinna, E.; Busoni, L.; Arcidiacono, C.; Xompero, M.; Briguglio, R.; Quiros-Pacheco, F.; Argomedo, J., "First closed-loop visible AO test results for the advanced adaptive secondary AO system for the Magellan Telescope: MagAO's performance and status", SPIE Proc. 8447, 0 (2012)

[6] Guyon, O.; Martinache, F.; Clergeon, C.; Russell, R.; Groff, T.; Garrel, V.; "Wavefront control with the Subaru Coronagraphic Extreme Adaptive Optics (SCExAO) system", SPIE Proc. 8149, 894293 (2011)

[7] Dekany, R.; Roberts, J.; Burruss, R.; Bouchez, A.; Truong, T.; Baranec, C.; Guiwits, S.; Hale, D.; Angione, J.; Trinh, T.; Zolkower, J.; Shelton, J. C.; Palmer, D.; Henning, J.; Croner, E.; Troy, M.; McKenna, D.; Tesch, J.; Hildebrandt, S.; Milburn, J.; "PALM-3000: Exoplanet Adaptive Optics for the 5 m Hale Telescope", ApJ 776, 130 (2013)

[8] Currie, T.; Guyon, O.; Martinache, F.; Clergeon, C.; McElwain, M.; Thalmann, C.; Jovanovic, N.; Singh, G.; Kudo, T.; "The Subaru Coronagraphic Extreme Adaptive Optics Imager: First Results and On-Sky Performance", Victoria Conf. Proceedings, 1307.4093 (2013)

[9] Dekany, R.; Burruss, R.; Shelton, J. C.; Oppenheimer, B.; Vasisht, G.; Metchev, S.; Roberts, J.; Tesch, J.; Truong, T.; Milburn, J.; Hale, D.; Baranec, C.; Hildebrandt, S.; Wahl, M.; Beichman, C.; Hillenbrand, L.; Patel, R.; Hinkley, S.; Cady, E.; Parry, I.; "First exoplanet and disk results with the PALM-3000 adaptive optics system", AO4ELT3 Conf. Proc., 52 (2013)

[10] Ragazzoni, R.; "Pupil plane wavefront sensing with an oscillating prism," Journal of Modern Optics 43, 289 (1996).

[11] Jovanovic, N.; Martinache, F.; Guyon, O.; Clergeon, C.; Singh, G.; Kudo, T.; Garrel, V.; Newman, K.; Doughty, D.; Lozi, J.; Males, J.; Minowa, Y.; Hayano, Y.; Takato, N.; Morino, J.; Kuhn, J.; Serabyn, E.; Norris, B.; Tuthill, P.; Schworer, G.; Stewart, P.; Close, L.; Huby, E.; Perrin, G.; Lacour, S.; Gauchet, L.; Vievard, S.; Murakami, N.; Oshiyama, F.; Baba, N.; Matsuo, T.; Nishikawa, J.; Tamura, M.; Lai, O.; Marchis, F.; Duchene, G.; Kotani, T.; Woillez, J.; "The Subaru Coronagraphic Extreme Adaptive Optics System: Enabling High-Contrast Imaging on Solar-System Scales" PASP 127, 890 (2015)