Mechanical design overview for the Main Structure of MAORY/MORFEO

Vincenzo De Caprio*[a], Vincenzo Cianniello[a,b], Christian Eredia[a], Domenico D'Auria[a], Enrico Cascone[a], Edoardo Redaelli[c], Matteo Aliverti[c], Giorgio Pariani[c], Marco Riva[c], Jacopo Farinato[d], Demetrio Magrin[d], Luca Marafatto[d], Gabriele Rodeghiero[e,f], Simonetta Chinellato[d], Matteo Munari[g], Ivan Di Antonio[f], Gianluca Di Rico[f] and Paolo Ciliegi[e]

[a]INAF - Osservatorio Astronomico di Capodimonte, Salita Moiariello 16, 80131 Napoli, Italy; [b]Università degli Studi di Napoli Federico II - Dipartimento di Ingegneria Industriale (DII), Via Claudio 21, 80125 Napoli, Italy; [c]INAF - Osservatorio Astronomico di Brera, Via E. Bianchi 46, 23807 Lecco, Italy; [d]INAF - Osservatorio Astronomico di Padova, Vicolo dell'Osservatorio 5, 35122 Padova, Italy; [e]INAF - Osservatorio di Astrofisica e Scienza dello Spazio di Bologna, Via P. Gobetti 93/3, 40129 Bologna, Italy; [f]INAF - Osservatorio Astronomico d'Abruzzo, Via Mentore Maggini s.n.c., 64100 Teramo, Italy; [g]INAF - Osservatorio Astrofisico di Catania, Via Santa Sofia 78, 95123 Catania, Italy.

ABSTRACT

Formerly known as MAORY [1][2][3], "MORFEO" (Multiconjugate adaptive Optics Relay For ELT Observations) is a post-focal adaptive optics module for the ELT designed to help compensate for distortions caused by turbulence in the Earth's atmosphere that shall provide two exit ports: one for MICADO and one for a second instrument. This module, able to compensate the wave-front disturbances affecting the scientific observations, will be installed on the Nasmyth platform of the ELT telescope at the straight-through focus, and shall re-image the telescope focal plane to MICADO (the first light imager of the ELT) and in a second instrument port.
In this paper we give a general overview of the mechanical design for MORFEO Main Structure (MMS) in the configuration presented for the Preliminary Design Review (PDR) in the first half of 2021, showing the proposed technical solutions for the MMS to fulfill the System requirements.

Keywords: Instrumentation for Extremely Large Telescopes, Multi-conjugate Adaptive Optics, Astronomy with AO.

*vincenzo.decaprio@inaf.it; phone: 0039.081.5575.111

1. INTRODUCTION

MORFEO (Multiconjugate adaptive Optics Relay For ELT Observations) that is not a scientific instrument in itself (as it does not produce scientific data on its own), is designed to support two different client instruments both with the same optical quality: MICADO (a near-infrared camera and spectrograph) and a second port for a future instrument. It will be located on the ELT Nasmyth platform A - Cerro Armazones (Chile) [9].

The opto-mechanical architecture of MORFEO includes three main sub-systems [4][6][15]:

- MORFEO system module that includes the Main Structure and the Post-Focal Relay Optics.
- LGS WFS module.
- NGS WFS module that includes the LOR WFS and the SCAO WFS.

Both the NGS WFS and SCAO WFS modules are hosted in the same structure; this structure, called Green Doughnut, will be mounted onboard of MICADO instrument.

Ground-based and Airborne Instrumentation for Astronomy IX, edited by Christopher J. Evans, Julia J. Bryant, Kentaro Motohara, Proc. of SPIE Vol. 12184, 121842X
© 2022 SPIE · 0277-786X · doi: 10.1117/12.2628893

In February 2020 the MORFEO Consortium carried out a trade-off study comparing two optical different configurations MMC (MORFEO Mirror Configuration) and MOC (Modified Offner Configuration). The first optical configuration was selected as a new baseline [15], and starting from this optical design developed in three dimensions, the mechanical design, completely revised [6][7], was presented at ESO in July 2021 for the PDR. This paper describes the mechanical design of the Main Structure of MORFEO for the MMC optical configuration.

2. MORFEO MAIN STRUCTURE - DESIGN OVERVIEW

The Main Structure of MORFEO is a sub-system of the whole MORFEO module that includes, in the current baseline configuration, the following listed items:

- MORFEO Main Support Structure (MORFEO_MSS), is the mechanical structure hosting all the Optomechanical elements [13].
- Thermal Enclosure – MORFEO side, is the cover structure of the MORFEO_MSS [14].
- MORFEO – MICADO Thermal Duct, is a structure between MORFEO and MICADO, that includes the mechanical frame (bottom part – TOWER) and the actual Thermal Duct with its proper structure.
- Thermal Enclosure – MICADO side, is the cover structure around M12 installed on the top side of MICADO, that includes its mechanical structure.
- CU Selector [12] for MORFEO Folding Mirror (FM CU) and MICADO Calibration Assembly (MCA), is the linear guide carriage that allows the system to switch between different positions.

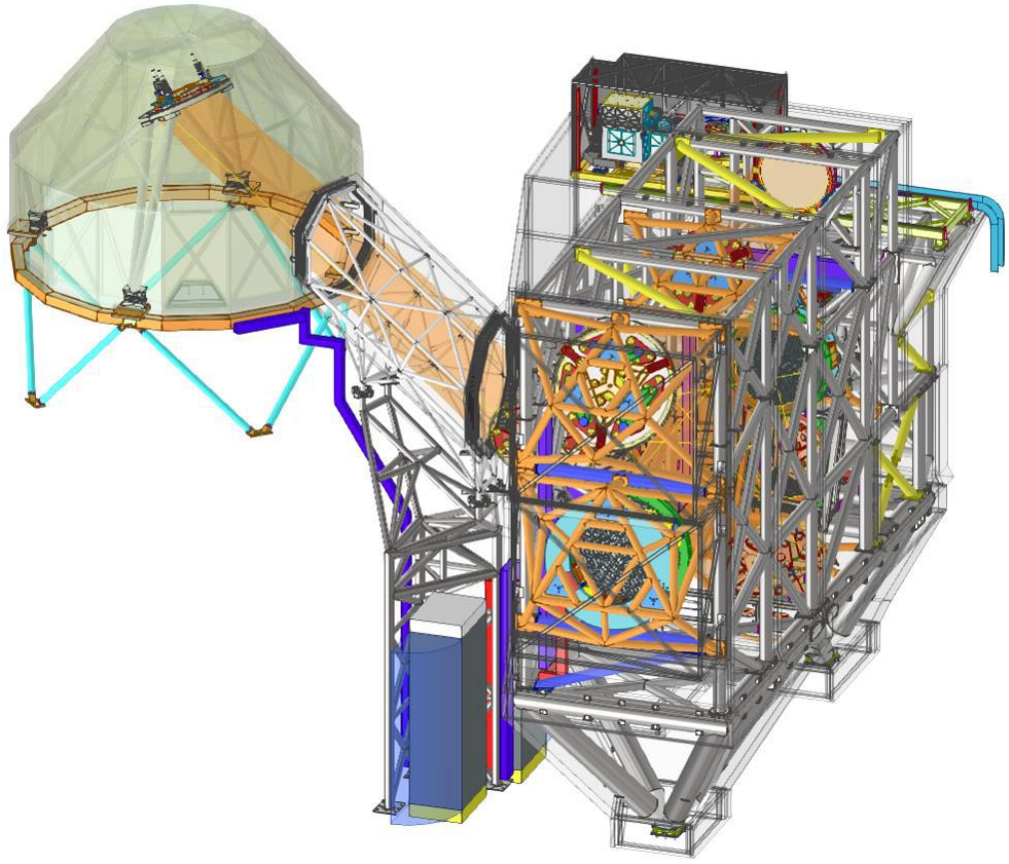

Figure 1. 3D CAD model assembly of MORFEO Main Structure.

The MORFEO Main Support Structure (MORFEO_MSS) will require to be fixed through three main support points on the grid of ESO Nasmyth Platform. In addition to these points, other three points will be necessary to fix the Support

Structure for the Thermal Duct, between MORFEO & MICADO, that connects MORFEO Thermal Enclosure to MICADO Thermal Enclosure.

The MICADO Thermal Enclosure (this mechanical structure is visible in the Figure 1) will be mounted directly on MICADO Main Support Structure (MICADO Top Bench) via four dedicated flanges.

3. MORFEO MAIN SUPPORT STRUCTURE - DESIGN OVERVIEW

The MORFEO MSS (Main Support Structure) is made of standard structural steel truss-beam shaped, with tubes both welded or bolted. The tubes have different section properties, in order to reach an optimal ratio between the global stiffness and the global mass of the whole MORFEO MSS (for structural FEM verification, please refer to [8]). The Main Support Structure has to provide a stable mechanical mounting for both optical subsystems and the MORFEO Thermal Enclosure hosted on it, giving them the required stiffness and resistance to the failure.

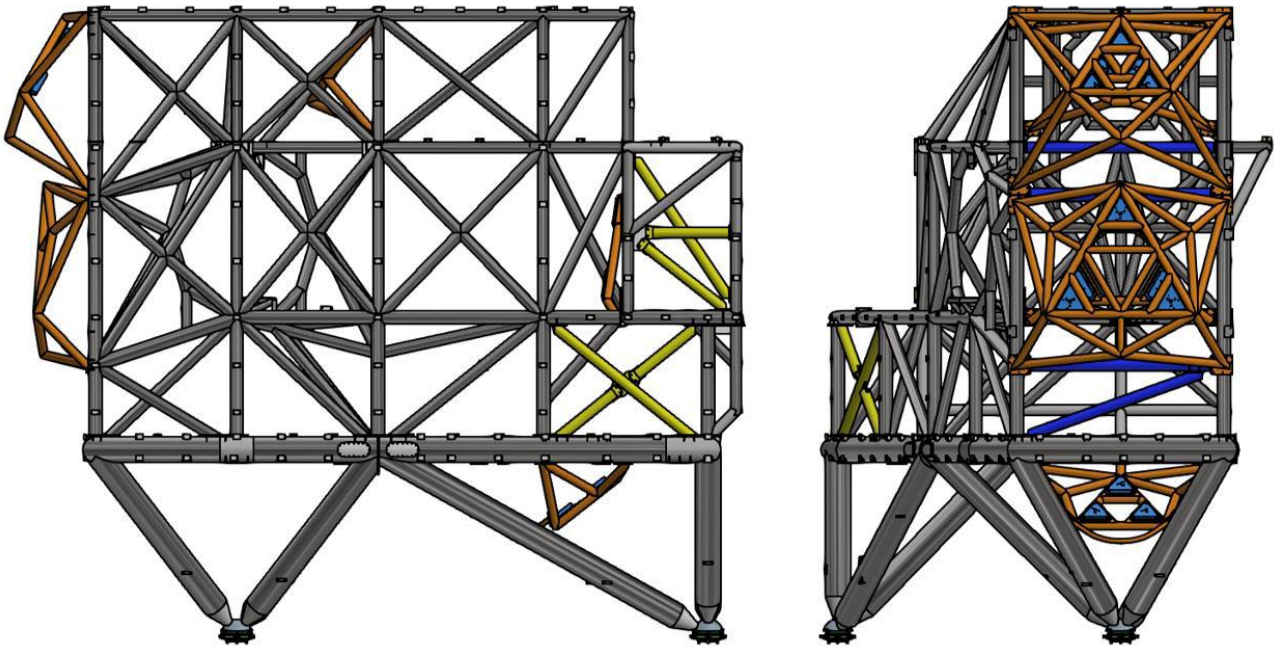

Figure 2. Front and side views of the MORFEO MSS with OSS onboard (orange painted) presented at PDR.

The whole structure is connected to the Nasmyth platform through 10 legs that will be joint into the three mounting support points on the ESO ELT Nasmyth platform A. The overall design has been constrained to fit with the three support points concept, in order to have an ideal interface plane. This strategy mitigates the distortion induced by the Nasmyth Platform displacements out of a rigid body motion.

The configuration of mechanical design for MORFEO_MSS, presented at ESO for PDR, in the previous Figure 2 is shown.

The Main Support Structure Assembly consist of the Main Support Structure (MSS) that holds up all optomechanical elements and their Optomechanical Support Structures themselves (OSS - elements in orange – see above Figure 2), and its main purpose is to provide a very stable opto-mechanical reference and a support for all the opto-mechanical elements and sub-assemblies components weighing on it.

The particular shape of the structure of the MSS is closely related to the position of the optical elements and the relative optical path that is mainly developed in a “vertical plane”. For this reason, the structure is “almost empty” in the central plane, in order to accommodate both the optomechanical elements and sub-systems and allow the light to pass into MORFEO.

Due to these reason, the stiffness of this mechanical layout of the MSS is entrusted by the side walls and by the first level of the structure (made up of a two separate steel structures, bolted together, called A1 and A2 – see next Figure 3).

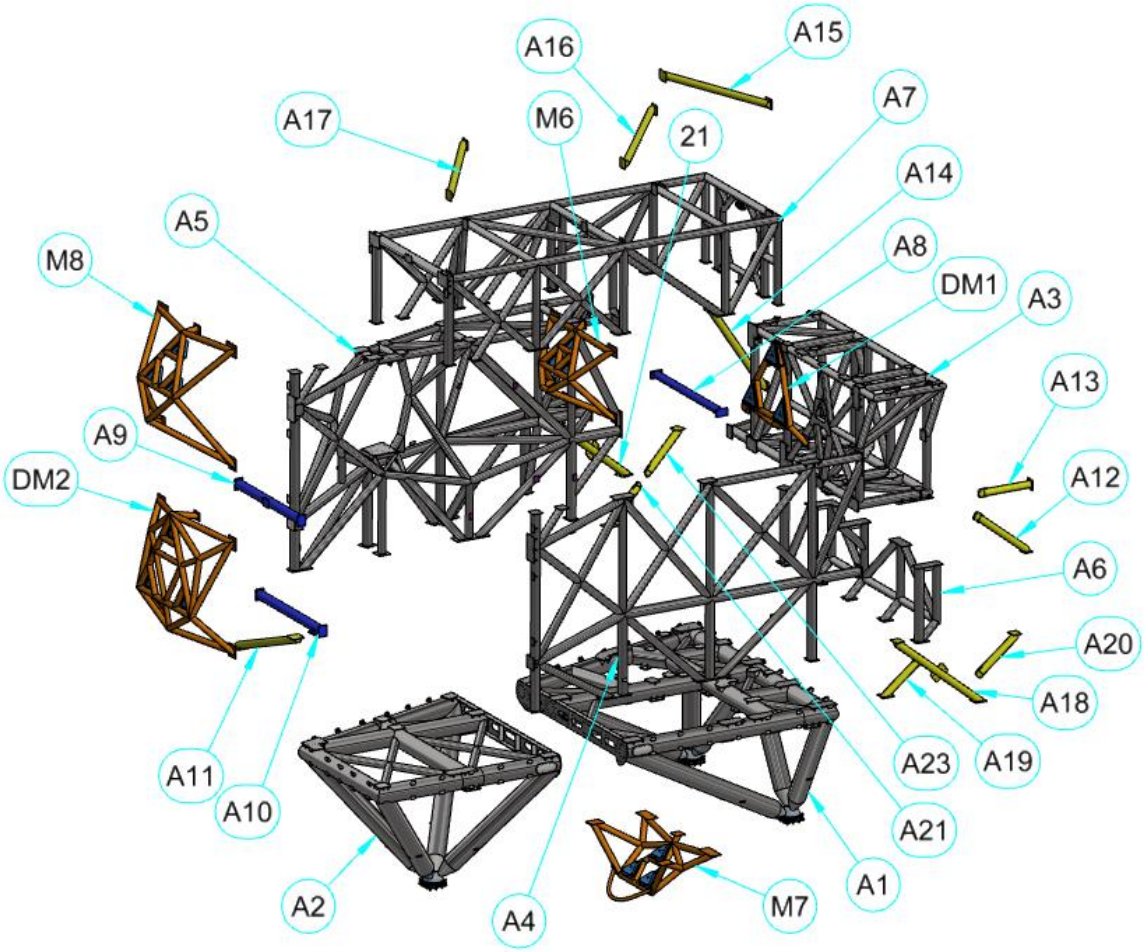

Figure 3. MSS exploded view and parts labels.

The MORFEO MSS shown in the Figure 2, due to reasons of building, transport and maintenance operations, will be split in in several parts connected to each other with bolts and using, also, reference pins in order to have an accurate mounting/dismounting for the various provisional phases (number of final parts is under evaluation):

- 7 main (welded) parts;
- 3 connection tubes, depicted in blue in in both Figure 2 & 3;
- 13 dismountable elements, depicted in yellow in in both Figure 2 & 3;
- 5 OSS (Optomechanical Support Structure) screwed holder for Optomechanical subsystems, named “M6”, “M7”, “M8”, “DM1” and “DM2”, depicted in orange in both Figure 2 & 3.

All tubes will be laser cut with appropriate shape, and then welded together. After welding, the assembly will be heat treated for stress relieving and then machined on the coupling flanges.

The protective treatment provided for all the steel parts is sandblasting and painting (the final treatment is TBD).

The accessibility to all optomechanical components and sub-assemblies (for mounting/dismounting/maintenance operations [16]) is ensured by the possibility of the temporary disassembly of some sub-assembly elements or beams from the MORFEO_MSS. Some of these items can be seen, depict in yellow, in the previous Figure 3.

Electrical harness, inside the MSS, is designed to be reliable and maintenance friendly. The cables are put inside metallic conduits to protect them from external agents [8][18][22][23].

The overall main dimensions of the Main Support Structure resulting by design and extrapolated directly from the CAD software are: 7853 x 4771 x 6679 mm without considering its Thermal Enclosure. In the following Figure 4 the detail of the dimensions is illustrated.

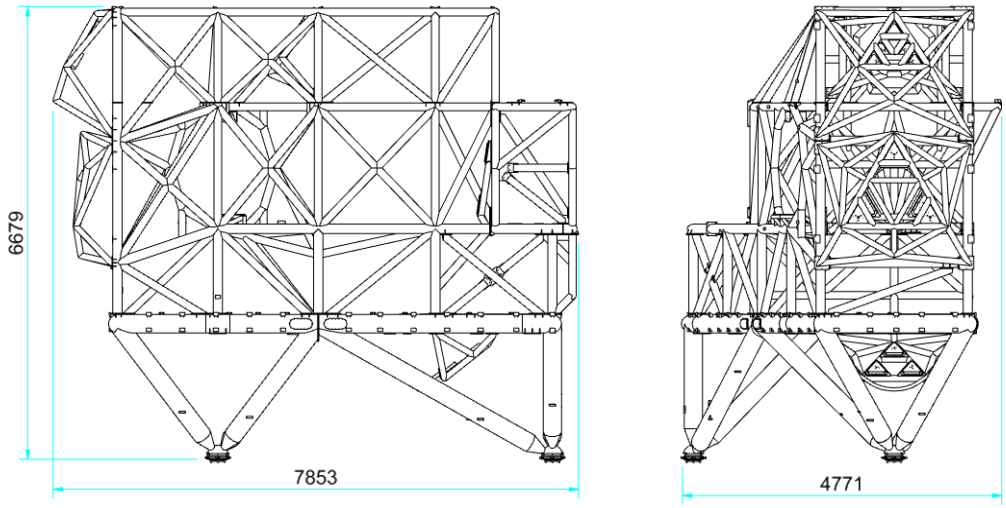

Figure 4. MSS overall dimensions without Enclosure.

3.1 Optomechanical Support Structure

The Optomechanical Support Structures (OSS) (orange structures highlighted in the next Figure 5), will be used in order to accommodate accurately the optical with its optomechanical elements [13] to install on the MORFEO module. The optical elements hosted are: SP (this OSS is an "octagonal aperture" part of the A7 Main Part), M6, M7, M8, M9/DM1, M10/DM2. The structure of these sub-assemblies are made of structural steel pipes and interface steel plates with the cinematic supports for the Optomechanics.
The interface with Optomechanical element, i.e. the Optomechanical reference plane, is made up of 3 screwed reference steel plates (depicted in light blue in the next Figure 5), that offer the mounting reference plane, and a good precision in connection, for the optomechanical sub-systems.

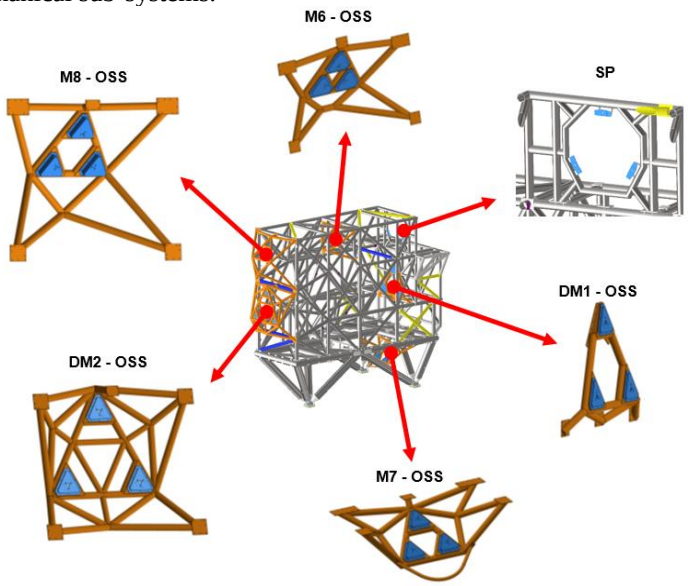

Figure 5. OSS - Optomechanical Support Structures.

These plates can be machined or substituted in case of relatively "large movement" of the optomechanical supports respect its present nominal position.

The selected material for all the standard tubes which compose all the OSS is the S355JR steel.

3.2 Interface Flanges on Nasmyt Platform

The MSS lattice structure is equipped, in its bottom part, with 10 legs that converge on 3 "Instrument Main Interface flanges" on the ESO-ELT Nasmyth Platform through 3 dedicated MSS interface flanges (Figure 6).

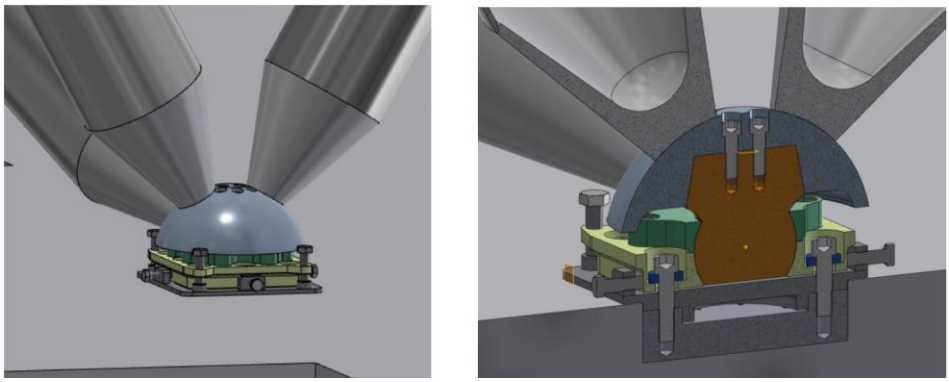

Figure 6. MSS Interface Flanges on Nasmyt Platform; section view in the right side.

Following the specifications reported in the technical documentation furnished by ESO, in order to mitigate local moments on the ESO Nasmyth attachment flanges [7], a spherical joint has been inserted between the ESO Nasmyth attachment flanges and the MORFEO MSS Main Interface flange, at the end of the MSS legs.
For the PDR we have presented a "joint" solution for the Main Interface flanges; alternative solutions are, currently, under investigation.

3.3 CU Selector for MORFEO FM_CU and MCA

The Calibration Unit Selector (CU Selector) is a mechanical subsystem made, essentially, of three main items: a fixed frame, constrained to the MSS, a mobile frame, to which is allowed a translation movement and the aluminum structure that supports the cover to protect both the MORFEO Folding mirror CU [19] and the three Calibration Modules of MICADO (MCA).

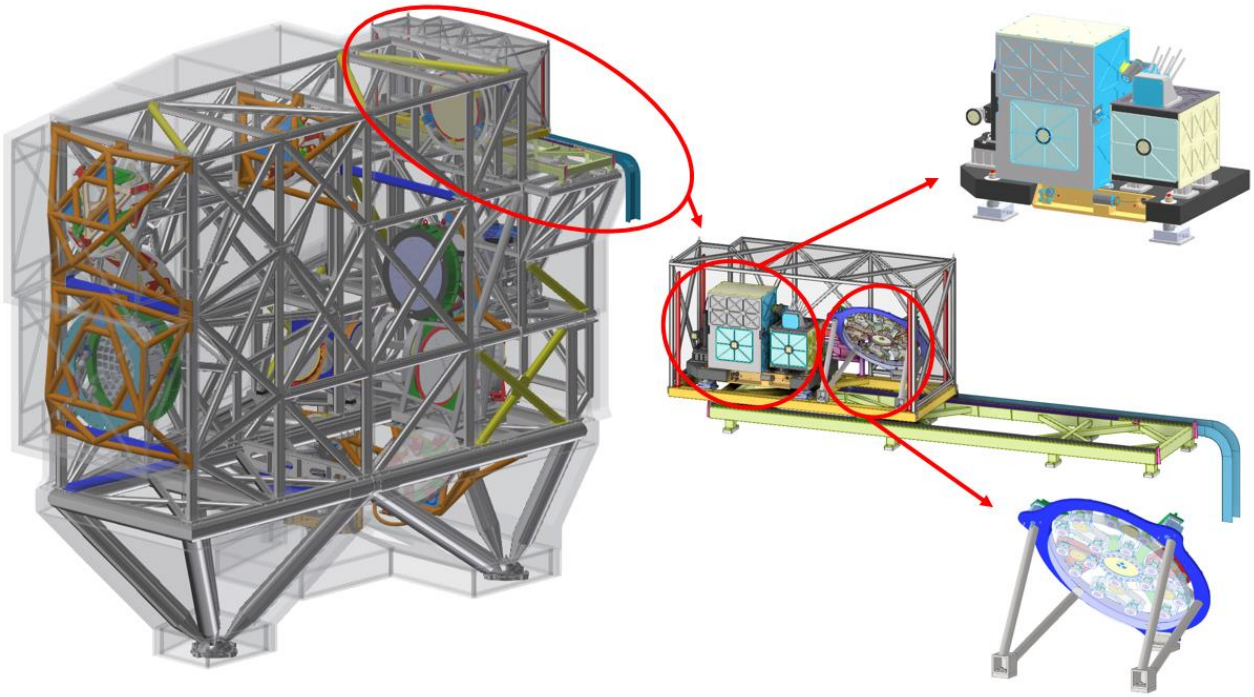

Figure 7. View of the location of the CU Selector and its onboard Modules.

The mobile frame [10] is powered and controlled electronically [8][12] and moves on a track that allows three possible "main" positions:

- Rest position (Position_1): the Smith Plate on the MORFEO focal plane is free, because the slide is positioned in the way in which the MCA and the FM CU are not covering it. So, no one of the two units mounted on the CU Selector is aligned to the Smith Plate;
- MORFEO Folding Mirror Calibration Unit (FMCU) in working position (Position_2), where the FM CU is aligned to the Smith plate;
- MORFEO Calibration Assembly (MCA) in working position (Position_3). Take into account that the work position for the MCA is the position of the central unit; the MCA has three different units.

The following figure shows a CAD with the layout of the three main positions.

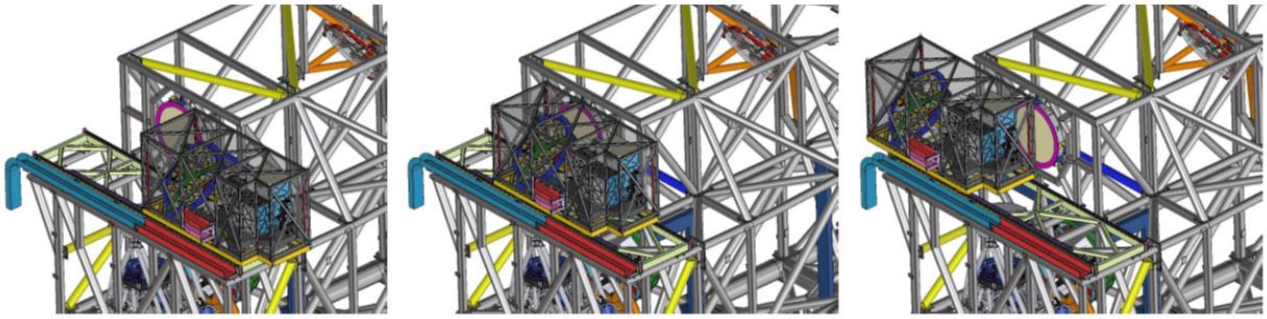

Figure 8. 3D view of the Main positions for the CU Selector.

The full access to this subsystem, by the front side, is granted removing the protection cover of the CU Selector from the top. The Calibration Unit design can be found in [16].

4. THERMAL ENCLOSURE GENERAL OVERVIEW – MORFEO SIDE

The Main Support Structure will be protecting by a thermal passive cover called MORFEO Enclosure. The Enclosure (the preliminary design proposed for PDR it's shown in the next Figure 9) protects the optics from light and dust, and thermally insulate the internal side of MORFEO from outside. For the thermal evaluations and design, refer to [14].

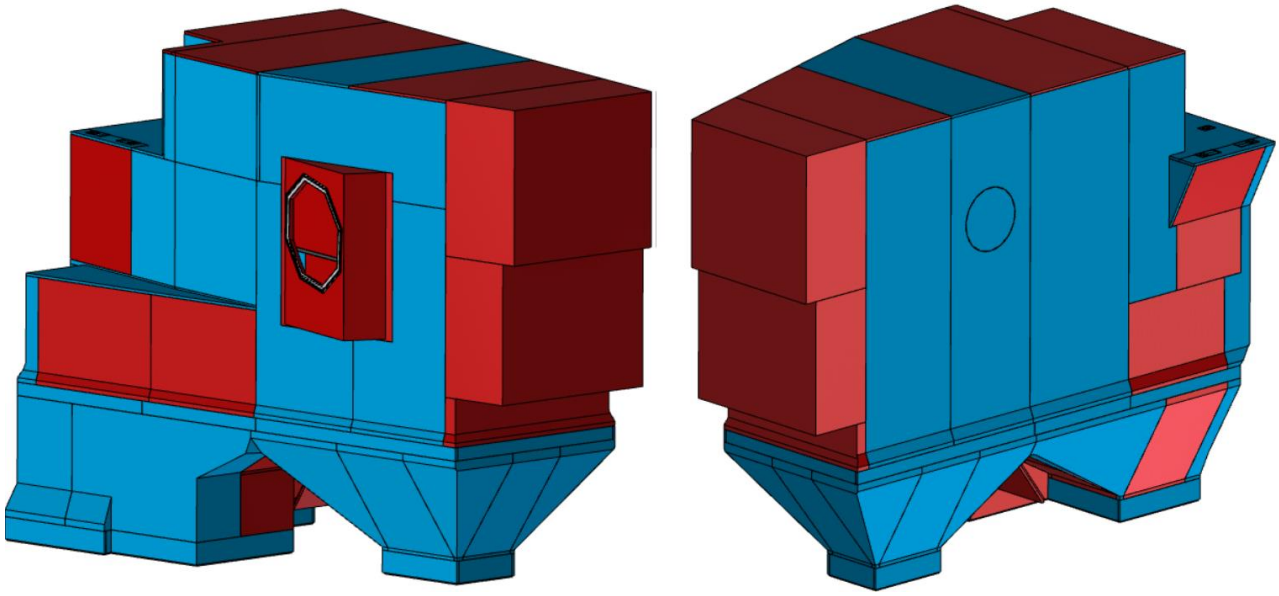

Figure 9. MORFEO: Thermal Enclosure overall view.

This Enclosure will consist of several panels, mounted on the MSS or, where it is not possible, to intermediate aluminum structures attached on the tubes of the MSS itself. The previous picture (Figure 9) shows the panels colored in two different ways: the red ones are the removable panels, while the blue one are fixed to the MSS.
The red panels can be easily dismounted for maintenance access, while the blue ones require more time and the dismounting of other panels before.
The access (two different) will be guarantee in two various areas: (near M7 and LGS subassemblies) will be used the side panel but for maintenance reasons, can be also dismounted the other red panels near LGS area.

4.1 Panel: mechanical design

The mechanical layout of the thermal panels (for passive insulation) is composed by layers of:

- Internal aluminium sheet, with a thickness of 1 mm.
- Thermal insulating layer in PIR (polyisocyanurate), with 70 mm of thickness.
- External plastic sheet (polycarbonate), with 1 mm of thickness.

The PIR material has a relatively low thermal conductivity ($\lambda o = 0.022$ W/mK) and a low density (35 kg/m3 ± 10%), for this reason it is suitable for a lightweight insulating cover. The edges of the panel are made of a carbon fiber composite profile, with a thickness of 1.5 mm, with different shape, depending on the position and the function of the panel, and also in order to compose the Thermal Enclosure. The several components of the panel are bonded together (glue to use TBD).

The shape of the edge is designed to have a light trap and a surface for a soft gasket seal, that is attached using adhesive, with a dimension of 20 x 2 mm and made of EPDM foam. The next Figure (left side) shows the typical junction between two panels: the first one is fixed to the structure (blue painted) and the second one dismountable (the red one).

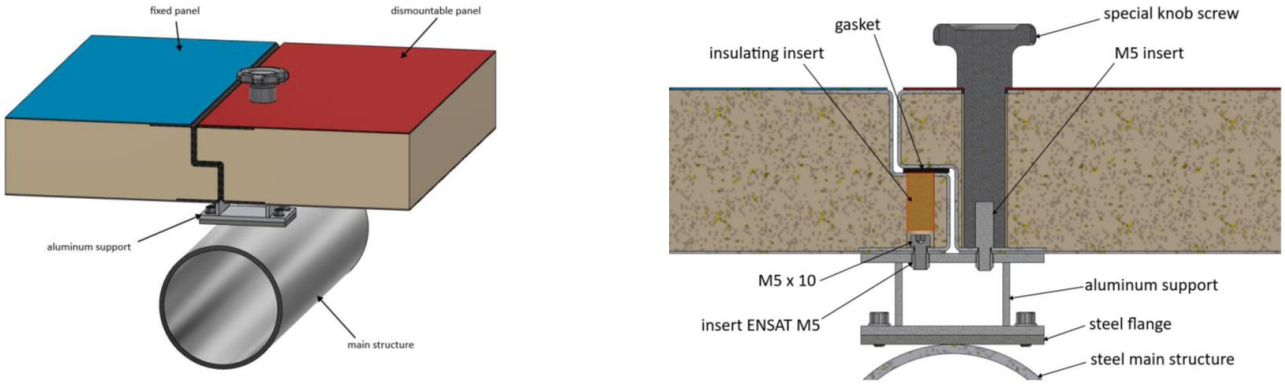

Figure 10. MORFEO Thermal Enclosure: junction between two panels – left side; Thermal Enclosure: Panels fixing - 3D layout section - right side.

The fixing scheme design is shown in the previous Figure. A threaded plate is welded on the MSS and an aluminium support is screwed on it, with four bolts M5 x 10, class 8.8. On the aluminium support there are two holes with ENSAT 307-0050 special inserts, with internal thread M5.

The removable panel is fixed with a special plastic knob, with a steel insert threaded M5, as schematically shown in the previous Figure 10 right side.

The not removable panel is screwed with an M5x10, hexagon socket head, and anti-loosening washer; an insert in insulating material covers the hole (on the external side of the panel). The adhesive gasket in EPDM foam is bonded on the fixed panel.

Where is not possible to fix the panels on the steel structure, an intermediate aluminium structure, built with tubular 40 x 40 x 2 mm, is used as support aluminium frame (i.e. in the bottom part).

Please take into account that the details dimensions of the (all) single panels will be delivered for the final phase.

5. MORFEO - MICADO THERMAL DUCT OVERVIEW

The Thermal Duct between MORFEO and MICADO is a cover for the optical path between M11 and M12 optical elements. The whole structure will be made in two different parts: the mechanical support frame, that will be fixed directly on the ESO Nasmyth platform via three additional support points, and the Thermal Duct, mounted on the previous one.

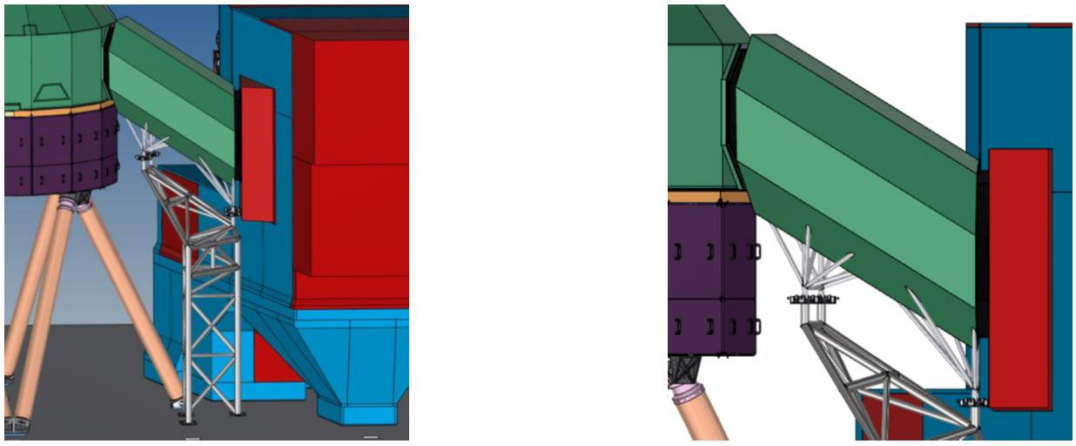

Figure 11. MORFEO – MICADO Thermal Duct overview.

The Thermal Duct is connected, at both ends, to MORFEO and MICADO Enclosures with two bellows, to allow relative motions between the two instruments, for example for earthquake and/or thermal expansion, leaving these free to move in relation to each other.

5.1 Mechanical frame structure

The mechanical frame structure will be make from steel (S275JR) tubes ISO 4200, with a diameter varying from 60.3 to 114.3, and, regarding the thickness, from 2.6 to 4.0 mm. The overall dimensions of this structure resulting by design and extrapolated directly from the CAD software are: 1788 mm x 1793 mm x 4388 mm. In the following Figure xxx the detail of the dimensions is illustrated.

For FEA verification refer to paper [7] in these proceedings.

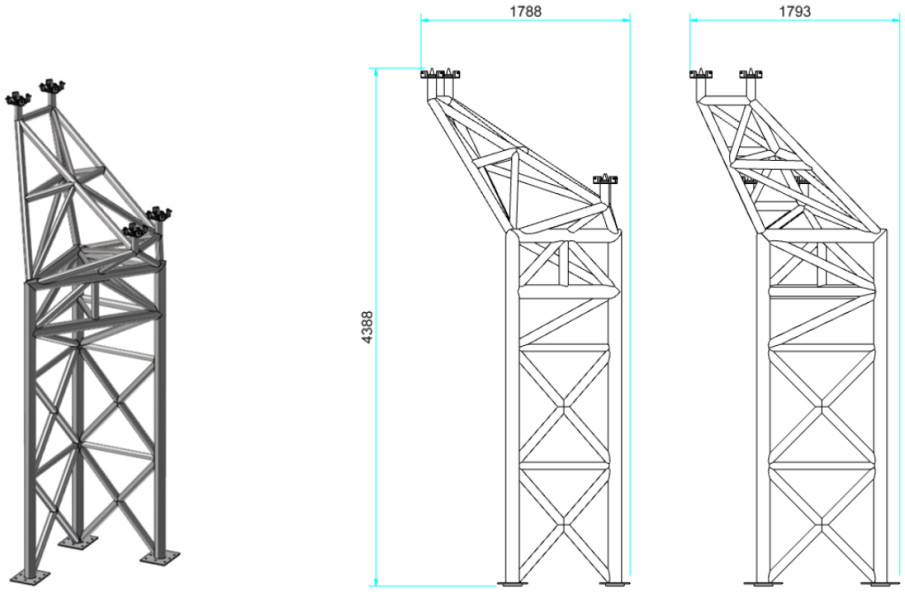

Figure 12. MORFEO - MICADO Thermal Duct: overview.

All tubes are laser cut with appropriate shapes, and then welded together, to compose a structure in one piece. The structure, after welding, will be heat treated for stress relieving and then machined on top and bottom flanges.

The structure will be connected to three additional support points on Nasmyth Platform, each with 8 bolts M20 x 35, 8.8 grade. No adjustment will be provided between the mounting flanges and the Nasmyth platform, since the regulation will be made between the top flanges of the frame structure and the base flanges of the duct structure.

The protective treatment provided is sandblasting and electro painting (final treatment TBD).

5.2 Thermal Duct structure

The structure of the Thermal Duct is made from aluminum standard tubes ISO 6362-6, with the diameter varying from 40 to 50 mm, and the thickness from 2 to 3 mm. They will be made of AL6082 material, a standard aluminum alloy. All the tubes are laser cut with appropriate shapes, and then welded together, to compose a structure in one piece, as shown in Figure 13.

The aluminum sheets, with 1 mm of thickness, are spot welded on the sides of the structure. Two aluminum plates, with a thickness of 5 mm, welded at the ends of the tunnel with an octagonal shape, will be used for the attachment flanges for the bellows. An insulating layer and an external plastic layer will be glued on the external aluminum surface.

The protective expected treatment is electro painting (final treatment - TBD), after polishing of welding residues and halos.

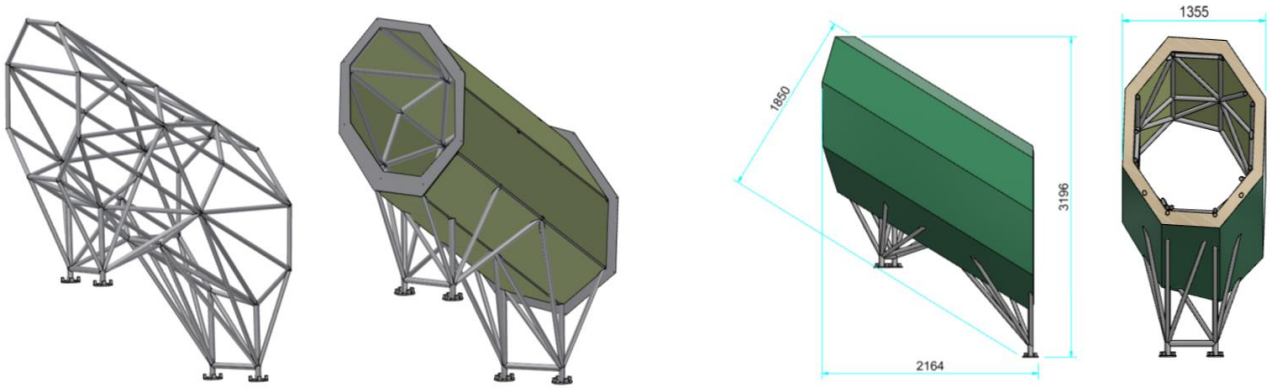

Figure 13. MORFEO – MICADO Thermal Duct - 3D CAD: left side - aluminum structure; right side: structure with panels.

Some details regarding the sheets installed on Thermal Duct structure can be seen in Figure 13 - left side

The Thermal Duct is built in one piece, structure and cover together, in this way is possible to transport it in a standard container. Only the two bellows have to be dismounted for transport. The overall dimensions of the Thermal Duct resulting by design and extrapolated directly from the CAD software are: 2164 mm x 1355 mm x 3196 mm.

The thermal insulating layer, covering the Thermal Duct structure, is made of different layers. It is composed by panels of PIR (polyisocianurate) with 100 mm of thickness [13] glued on the aluminum sheets, described above, and covered by a protective polycarbonate sheet.

6. MICADO THERMAL ENCLOSURE OVERVIEW

The MICADO Thermal Enclosure is located on the top of MICADO instruments, being the roof of the structure. It insulates the upper part of MICADO instrument together with M12 subsystem (passive insulation), and protect them from light and dust. The Enclosure is made of a support structure in aluminum, split in two halves, for transportability reasons, and an insulating layer [14].

After assembled the two halves, all the structure with the Thermal Enclosure can be lifted in one piece.

The MICADO Enclosure is made from five main parts: the interface flanges, the two halves of the dome, a junction part for the Thermal Duct and a porthole for electronic cables. There are also a large number of small covers to close the connection flanges and the lifting points.

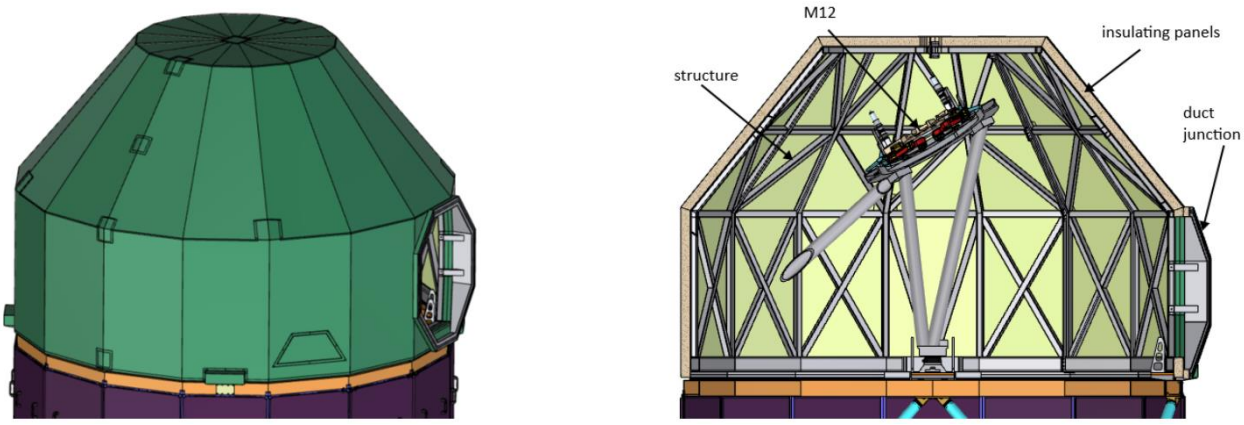

Figure 14. MICADO Thermal Enclosure.

The structure is fixed on four flanges that represent the interface with MICADO. Three of these plates support also the M12 Optomechanical subassembly. At the base of the structure a soft seal will close the gap with the upper part of MICADO Top bench structure. On the side toward MORFEO there is the opening for the light coming from M11 mirror, through the MORFEO-MICADO Thermal Duct. The following Figure 15 show an exploded view of the MICADO Thermal Enclosure, where all the parts previously described can be seen.

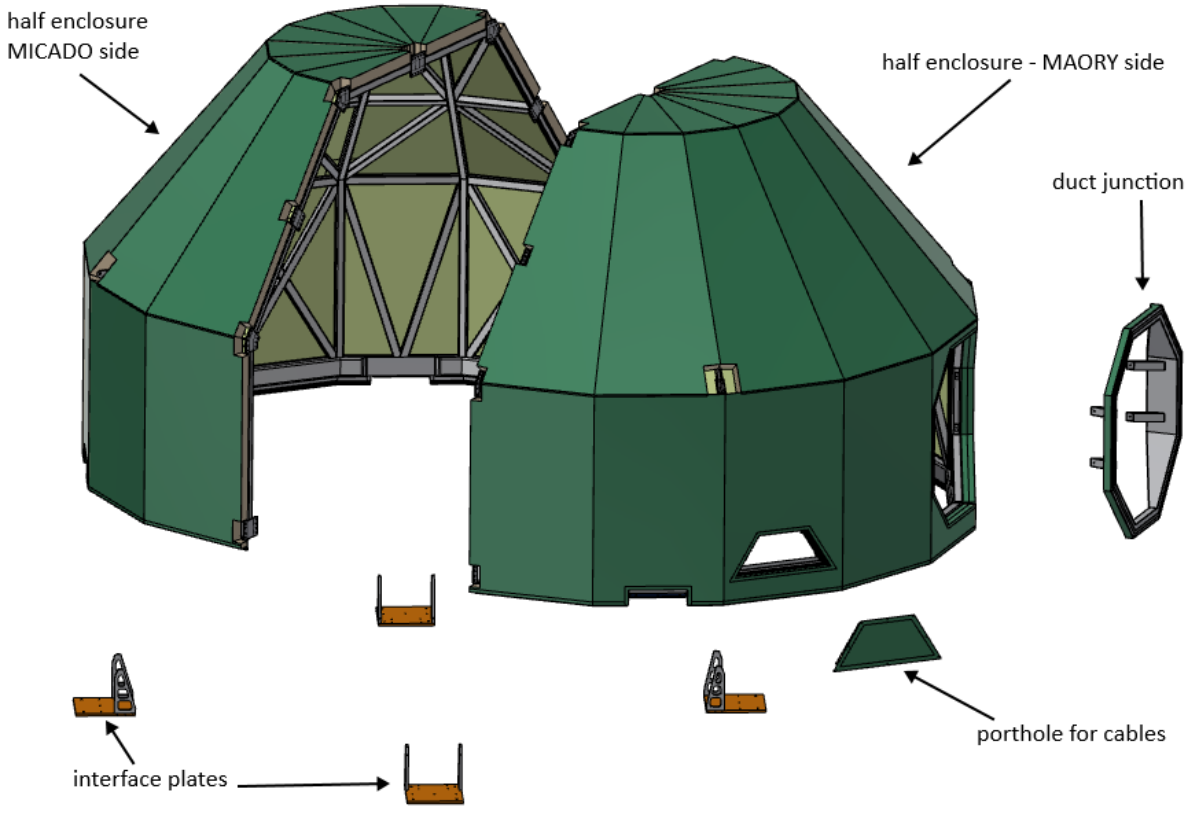

Figure 15. MICADO Thermal Enclosure, exploded view.

The structure must be light and easily removable for maintenance access, for this reason the 12 connection bolts are on the external side, reachable from the walkway around MICADO. The MICADO Enclosure structure can be lifted in one piece with 4 attachment points positioned at first level of the structure. It is necessary unscrew the bellow between this Enclosure

and the MORFEO-MICADO Thermal Duct, besides to disconnect the electrical cables of M12 subassembly to lift the structure.

To disconnect the cables, a porthole for all electrical cables is located near one interface flange with MICADO. The cable connectors will be disconnected from the external side, leaving the porthole with internal cables attached inside the cover, near the leg of the M12 mounting. To facilitate the positioning of the Enclosure and avoid damage of the optical mount, two centering plate are positioned on every attachment flange. For transport reasons, the structure is split in two symmetrical parts, joined together with bolted flanges.

On MICADO side is provided a special structure, the Thermal Duct joint (in Figure 15), that allows to adapt the shape of Thermal Duct to the polygonal shape of MICADO Thermal Enclosure.

7. WEIGHT OF THE MORFEO MAIN STRUCTURE

This chapter it is just to give a complete view of the mass characteristic of the MORFEO Main Structure. The following Table represent all the mass contributes of the single component described in the previous paragraphs and give the total mass computed for the Main Structure.

The selected materials and inertia properties for all chosen mechanical components (that satisfy the performances and the requirements [17] of the whole System described in the previous pages - verified by FEM analysis), can be found in [7].

Table 1. MORFEO Main Structure - Mass budget Table.

MORFEO Main Structure (PM0) - Mass budget	
Items	**Mass [kg]**
MORFEO Main Support structure	8291
MORFEO Enclosure	1918
MORFEO – MICADO Thermal Duct	517
MICADO Enclosure	549
CU Selector	340
TOTAL	**11615**

8. MORFEO - AUXILIARY EQUIPEMENTS

8.1 Internal walkway system for MORFEO MSS - Preliminary design

A system composed by footboards, ladders and walkways is provided to access inside the MORFEO Main Support Structure and reach all Optomechanical elements, for assembly. disassembly or maintenance [16] (see next Figure 16).

The internal walkways are supported by a light aluminum frame shown in Figure 17, right side. Just as example, Figure 18 in the next pages shows an operator assembling a tubular beam of the upper level standing on the first floor.

The aluminum structure is mainly composed by rectangular tubulars 80 x 40 x 3 mm and is supported by shelf bolted to the Main Support Structure (Figure 17, left side).

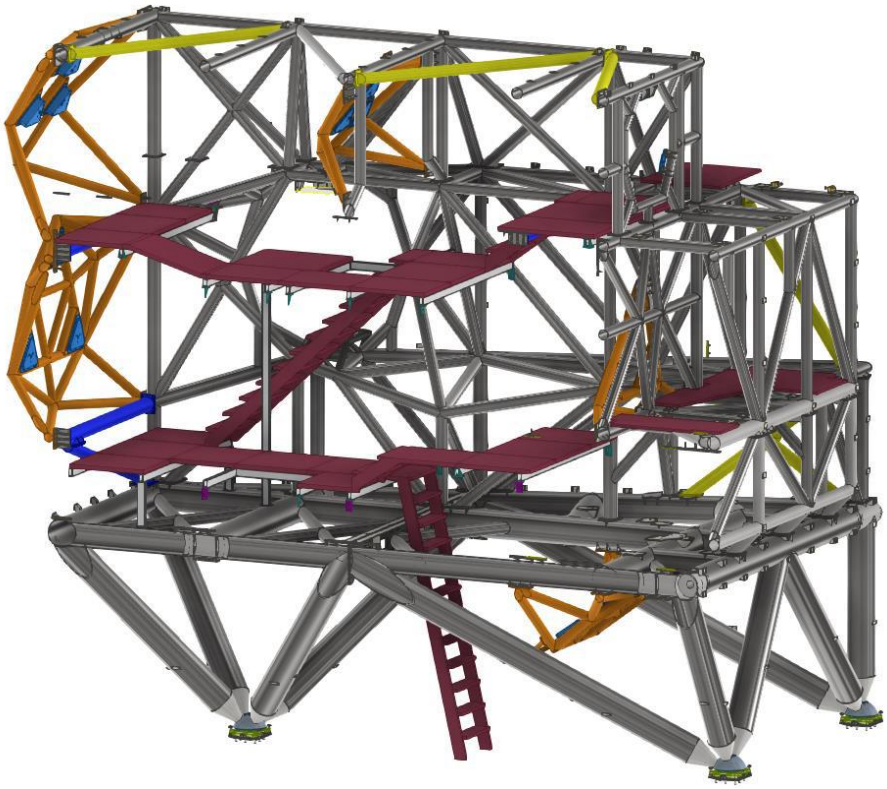

Figure 16. Internal walkway for MSS - section view.

The walkable panel material will be an aluminum honeycomb, with a thickness of 40 mm.

The shelf, composed by aluminum AL6082 welded plate, have a thickness of 5 and 6 mm. It is bolted to the MSS with M6, class 8.8 bolts.

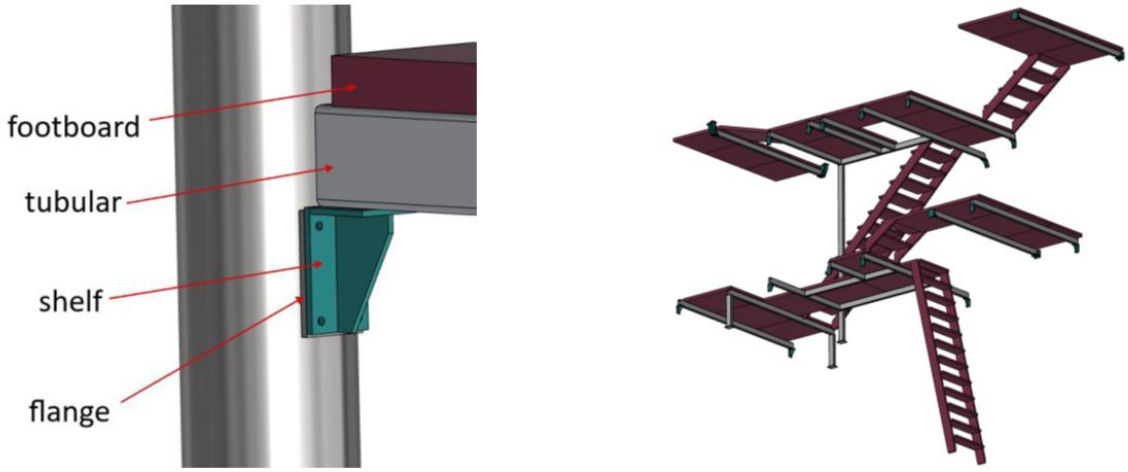

Figure 17. Walkways support items.

The system must be assembled only if necessary, because most of the parts are in interference with the optical path.

All parts must be installed by hand, starting from the bottom, and assembling as you advance inside the structure. Due to handling reasons, because of no one instrument can be used to carry the support items, like crane or similar, all parts must be relatively light and small.

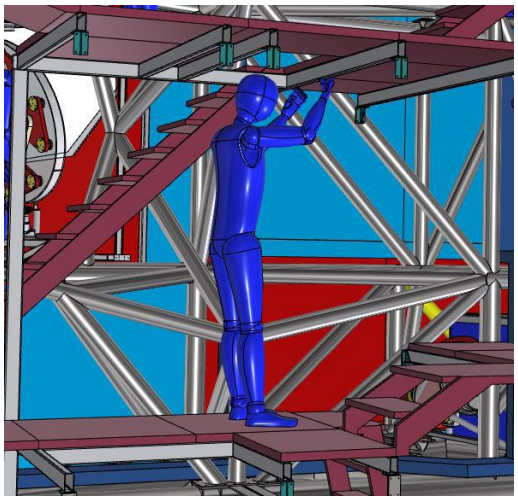

Figure 18. Internal walkway - mounting operations.

8.2 Special Tool to lift MORFEO on Nasmyth platform

A special tool is used to lift the MORFEO main structure on the Nasmyth platform. The tool is composed by two single beams and a cross spreader beam. The two single beams will be positioned and bolted under the first level of MSS, as shown in next Figure 19.

In order to fasten the beams to the structure, four flanges have been designed on the MSS. Each flange has 6 M16 threaded holes.

During the lift operations, the bottom part of MORFEO Thermal Enclosure must be not assembled, as Figure 19 shows, to have the free space to insert the two beams and to join the base flanges on Nasmyth platform.

During the lifting, a cross beam is suspended to the crane hook with four converging chains, while other four chains link the two beams to the cross beams.

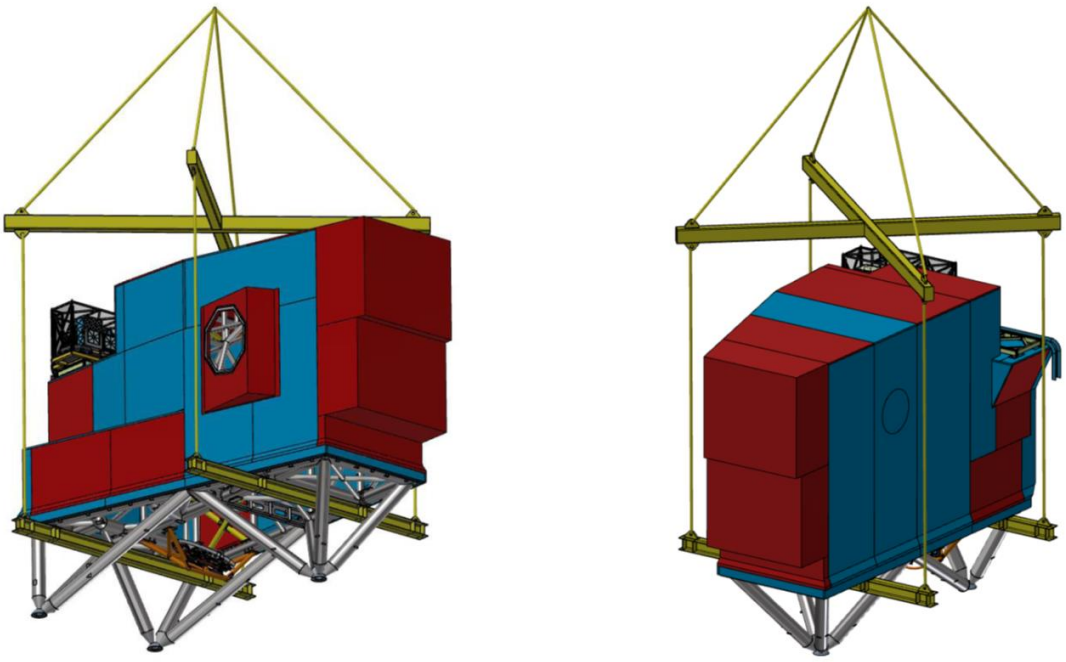

Figure 19. Lifting Special tool to lift MORFEO on ESO-ELT Nasmyth Platform.

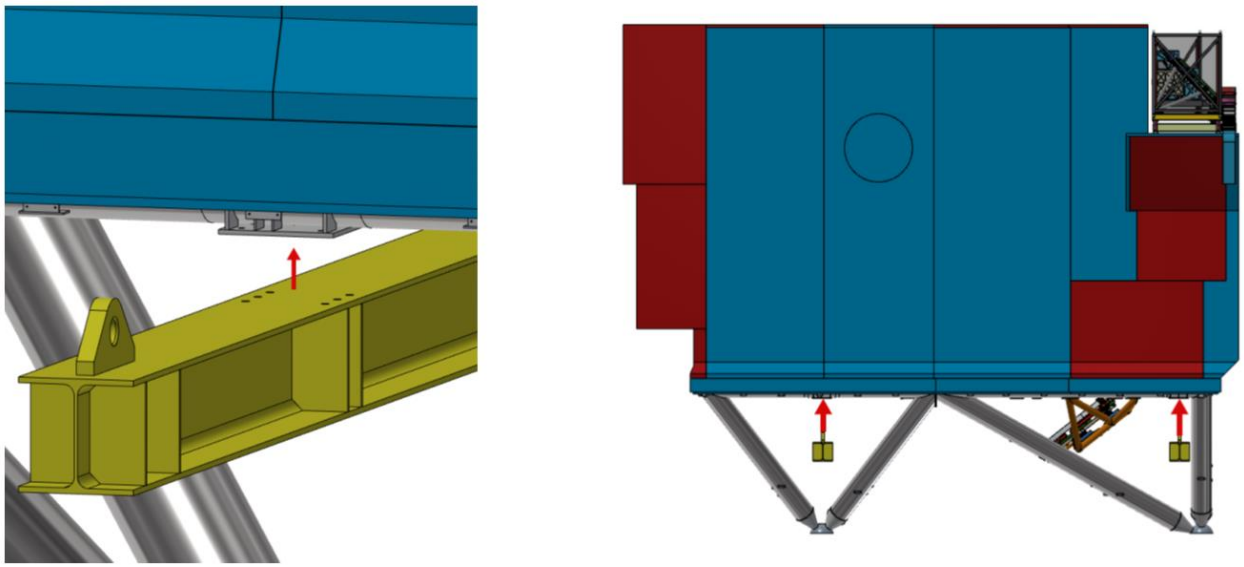

Figure 20. Single beams mounting on MORFEO MSS operations.

The length of the beams will be designed to have the hook attachment point vertically, above the estimated position of center of mass, in order to avoid overturns. The bottom beams are built with HEA 260 profile, made of steel S355 JR, with reinforcement plates with a thickness of 10 mm and suspension plates with a thickness of 40 mm. The cross beams are composed by tubular 300 x 200 x 8 mm, made of steel S355 JR.

Chains and other lifting accessories are TBD.

9. CONCLUSIONS

A general overview of the last baseline mechanical design of the MORFEO Main Structure has been presented in this paper. Significant changes of requirements and instrument design have been made since the MORFEO project phase A [1][2]. The detailed set of preliminary FEM Analyses performed [7], prove that the mechanical model presented in this paper is compliant with the requirements imposed by ESO for ELT Instrumentation.

10. ACKNOWLEDGEMENTS

The MORFEO instrument is developed in the framework of the Agreement No. 65221/ESO/15/67001/JSC between the European Organisation for Astronomical Research in the Southern Hemisphere (ESO) and the Istituto Nazionale diAstrofisica (INAF) on behalf of the Consortium consisting of INAF, Institut National des Sciences de I'Univers du Centre National de la Recherche Scientifique (INSU/CNRS) acting on behalf of the Institut de Planetologie et d'Astrophysique de Grenoble (IPAG) and of School of Physics at the National University of Ireland Galway (NUIG).

REFERENCES

[1] Diolaiti, E.et al, Preparing for the phase B of the E-ELT MCAO module project, Proc. SPIE 9148, 91480Y (2014).
[2] Diolaiti, E. et al, MAORY: adaptive optics module for the E-ELT, Proc. SPIE 9909, 99092D, (2016).
[3] Lombini, M. et al, Optical design of the Post Focal Relay of MAORY, Proc. SPIE 9908, 9908AB, (2016).
[4] De Caprio, V. et al, MAORY for ELT: preliminary mechanical design of the support structure, Proc. SPIE 10703, 107034H (2018).
[5] Lombini, M. et al, Optical design of the post focal relay of MAORY, Proc. SPIE 10690, 1069011, (2018).
[6] De Caprio, V. et al, MAORY Main Structure design: general overview, Proc. SPIE 11448-156 (2020).
[7] Cianniello, V., et al., "Structural Analyses of the MAORY/MORFEO Main Support Structure at global level for Preliminary Design Review", Proc. SPIE, 12184-138 (2022), in these Proceedings.
[8] Cascone, E., et al., "General overview of MORFEO (formerly known as MAORY) Instrument Control Hardware design", Proc. SPIE, 12184-110 (2022), in these Proceedings.
[9] Ciliegi, P., et al., "MAORY@ELT: general overview up to the preliminary design and a look towards the final design", Proc. SPIE, 12185-40 (2022), in these Proceedings.
[10] Cianniello, V., et al "Finite Element modelling technique: trade-off between two different FE models of a mechanical selector for Astronomical Instrumentation", Proc. SPIE, 12184-97 (2022) in these Proceedings.
[11] Cianniello, V., et al "Global to Local FEA validation for complex geometries: submodeling technique applied to mechanical structures for ELT class of instrumentation", Proc. SPIE, 12184-96 (2022) in these Proceedings.
[12] D'Auria, D., et al., "Mechanical and electronic design of the MORFEO (formerly known as MAORY) Calibration Unit selector", Proc. SPIE, 12184-109 (2022), in these Proceedings.
[13] Redaelli, E., et al., "MAORY@ELT: Optomechanical preliminary design", Proc. SPIE, 12185-177 (2022), in these Proceedings.
[14] Aliverti, M., et al., "MAORY@ELT: Thermal Control System preliminary design", Proc. SPIE, 12185-176 (2022), in these Proceedings.
[15] Pariani, G. et al, MAORY optical design and performances: status at preliminary design review, Proc. SPIE 12185-212 (2022), in these Proceedings.
[16] Farinato, J., et al., "The MAORY MAIT strategy in Europe", Proc. SPIE, 12185-267 (2022), in these Proceedings.
[17] Riva, M., et al., "MAORY@ELT: System Engineering activity up to preliminary design review", Proc. SPIE, 12187-60 (2022), in these Proceedings.
[18] Cascone, E., et al., "MAORY Instrument Control Hardware: general overview", Proc. SPIE 11447, 1144735 (2020).
[19] Di Rico, G., et al., "MAORY@ELT: Calibration Unit overview", Proc. SPIE, 12185-204 (2022), in these Proceedings.
[20] Ciliegi, P., et al., "MAORY: the adaptive optics module for the Extremely Large Telescope (ELT)", Proc. SPIE 11448, 114480Y (2020).
[21] Ciliegi, P., et al., "MAORY: a multi-conjugate adaptive optics relay for E-ELT", ESO Messenger, No. 182 (2020).
[22] Eredia, C., et al., "Analysis of the requirements and their impact on the design of electronic cabinets for the current generation of ESO ELT instruments", Proc. SPIE, 12184-112 (2022), in these Proceedings.
[23] Eredia, C., et al.., "Trade-off between different PLC based architectures of Instrument Control Hardware for ESO ELT class of instrumentation", Proc. SPIE, 12184-111 (2022), in these Proceedings.
[24] Cianniello, V., et al "Lightweighting strategies for Main Support Structures of ELT instrumentation", Proc. SPIE 11451, 114512R (2020).
[25] Chinellato, S., et al., "MAORY: the RAM analysis approach for preliminary design", Proc. SPIE, 12187-9 (2022), in these Proceedings.
[26] D'Auria, D., et al., "Hazard and failure modes analysis of the Instrument Control Hardware design for ELT class of instrumentation", Proc. SPIE, 12187-53 (2022), in these Proceedings.