2nd URSI AT-RASC, Gran Canaria, 28 May – 1 June 2018

Design of PHAROS2 Phased Array Feed

A. Navarrini[(1)], J. Monari[(2)], A. Scalambra[(2)], A. Melis[(1)], R. Concu[(1)], G. Naldi[(2)], A. Maccaferri[(2)], A. Cattani[(2)], P. Ortu[(1)], J. Roda[(2)], F. Perini[(2)], G. Comoretto[(3)], M. Morsiani[(2)], A. Ladu[(1)], S. Rusticelli[(2)], A. Mattana[(2)], P. Marongiu[(1)], A. Saba[(1)], M. Schiaffino[(2)], E. Carretti[(2)], F. Schillirò[(4)], E. Urru[(1)], G. Pupillo[(2)], M. Poloni[(2)], T. Pisanu[(1)], R. Nesti[(3)], G. Muntoni[(1)], K. Zarb Adami[(5,6)], A. Magro[(5)], R. Chiello[(6)], L. Liu[(7)], K. Grainge[(7)], M. Keith[(7)], M. Pantaleev[(8)], W. van Cappellen[(9)]

(1) INAF-Osservatorio Astronomico di Cagliari, Selargius, Italy
(2) INAF-Istituto di Radioastronomia, Bologna, Italy
(3) INAF-Osservatorio Astrofisico di Arcetri, Florence, Italy
(4) INAF-Osservatorio Astrofisico di Catania, Catania, Italy
(5) University of Malta, Malta
(6) University of Oxford, Department of Physics, UK
(7) University of Manchester, Jodrell Bank Observatory, UK
(8) Onsala Space Observatory, Chalmers, Sweden
(9) ASTRON, Dwingeloo, The Netherlands

Abstract

We describe the design and architecture of PHAROS2, a cryogenically cooled 4-8 GHz Phased Array Feed (PAF) demonstrator with digital beamformer for radio astronomy application. The instrument will be capable of synthesizing four independent single-polarization beams by combining 24 active elements of an array of Vivaldi antennas.

PHAROS2, the upgrade of PHAROS (PHased Arrays for Reflector Observing Systems), features: *a)* commercial cryogenic LNAs with state-of-the-art performance, *b)* a "Warm Section" for signal filtering, conditioning and single downconversion to select a ≈275 MHz Intermediate Frequency (IF) bandwidth within the 4-8 GHz Radio Frequency (RF) band, *c)* an IF signal transportation by analog WDM (Wavelength Division Mutiplexing) fiber-optic link, and *d)* a FPGA-based Italian Tile Processing Module (iTPM) digital backend.

PHAROS2 will be mounted at the primary focus of the 76-m diameter Lovell radio telescope (Jodrell Bank Observatory, UK) for technical and scientific validation.

1. PHASED ARRAY FEEDS

Phased Array Feeds (PAFs) are a key technology enabling the next major advancement in radio astronomy. In contrast to multi feeds, the elements of a PAF are densely packed (≈0.5 λ at the highest design frequency) and combined in weighted sums to form multiple independent beams. The beams and the antenna properties resulting from a PAF equipped with a digital beamformer can be optimized, using frequency-dependent weights, for each of the backend frequency channels (of order ≈1 MHz) leading to high antenna aperture efficiencies and low spillover losses for all the synthesized beams over the entire band. The flexibility of a PAF allows achieving a complete coverage of the available radio telescope Field of View (FoV,) thus increasing the survey speed if compared to a single-pixel feed. Furthermore, PAFs offer a number of benefits also over more conventional non-densely packed multi feeds, which cannot fully sample the focal plane and require few interleaved pointing to fully sample the sky. In particular, additional advantages of the PAF technology include:
a) reduction of bandpass ripples; *b)* Radio Frequency Interference (RFI) mitigation; *c)* improvement of the beams polarization purity; *d)* possibility to correct for dish surface errors; *e)* possibility to perform electronic de-rotation of the astronomical field during source tracking to compensate for the Earth's rotation in a radio telescope with altitude-azimuth movement.

1. PHAROS

PHAROS is a C-band cryogenically cooled low noise PAF with *analogue* beamformer designed to operate at the focus of a large single-dish radio telescope. Figures 1 and 2 show respectively, a schematic system diagram of PHAROS and a view of the PHAROS PAF dome-shaped vacuum window and of the array of antennas.

A description of the instrument can be found in [1, 2, 3, 4]. PHAROS consists of a 220-element Vivaldi array cooled at ≈20 K along with 24 low noise amplifiers (LNAs) mounted behind the antenna elements. The LNAs are cascaded with low-loss low-thermal conduction RF connections to the analogue beam former designed to operate at ≈77 K. The RF signals of the active elements are distributed to the beam formers by passive splitters, while the non-active elements are terminated into 50 Ω loads. Four beam former modules are available inside the cryostat, each with 13 RF inputs and 13 individually

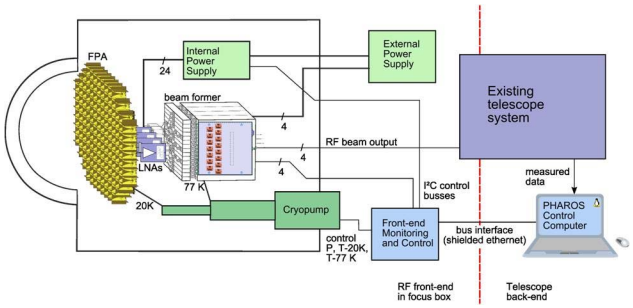

Figure 1. PHAROS system diagram.

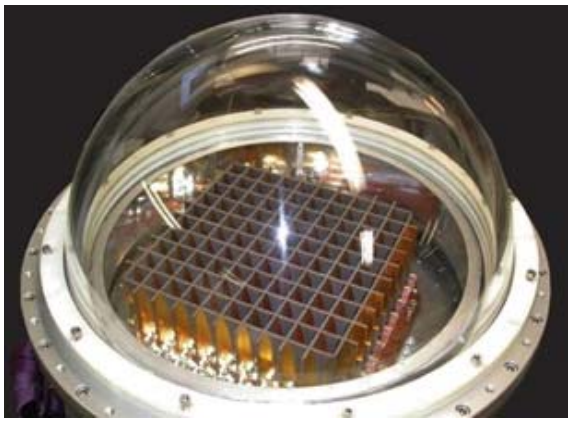

Figure 2. PHAROS focal plane array and dome-shaped vacuum window attached to the cryostat.

controllable phase and amplitude control units (PACs), along with 13 amplifiers to compensate for system losses. The last stage of the analogue beam forming system is a 16-way Wilkinson combiner (with three unused inputs). Each analog beam former controls the weights of the amplitude and of the phase from 13 antenna elements to produce a single (compound) one-polarization beam.

2. PHAROS2

PHAROS is being upgraded to PHAROS2, a new PAF with *digital* beamformer. The latter re-uses part of the existing PHAROS hardware, including the cryostat and the array of Vivaldi antennas. PHAROS2 is under development in the framework of the SKA (Square Kilometer Array) PAF Advanced Instrumentation Program as a collaboration among the following institutions: the National Institute for Astrophysics (INAF, Italy), the Jodrell Bank Observatory (University of Manchester, UK), the Netherland Institute for Radio Astronomy (ASTRON, the Netherland), the Onsala Space Observatory (OSO, Sweden) and the University of Malta (Malta). In PHAROS2 a digital beamformer (at room temperature) replaces the four PHAROS analog beamformers.

The main PHAROS2 capability will be the possibility of digitally forming four independent beams on the sky using 24 antenna elements, each beam covering an instantaneous IF bandwidth of ≈275 MHz across 375-650 MHz.

We aim at completing and installing PHAROS2 on the Lovell 76-m diameter radio telescope at the Jodrell Bank Observatory (UK) and carry out the technical validation of the instrument, including antenna efficiency optimization and multi-beaming scientific observations for demonstration of the adopted technologies that may find application in the SKA.

The architecture of PHAROS2 (see schematic layout in Fig. 3) consists of three main blocks: *a)* the "PHAROS2 cryostat," to be equipped with new LNAs and possibly a new vacuum window; *b)* the "Warm Section," to be located in the primary focus receiver room of the Lovell telescope, next to the cryostat; *c)* the "iTPM digital backend," to be located in the backend room of the Jodrell Bank Observatory (a few hundred meters away from the Lovell telescope).

The Warm Section (WS) is connected to the digital backend through analog WDM fiber optic links allowing to transport two IF signals over a single fiber. The detailed PHAROS2 specifications are summarized in Table. 1.

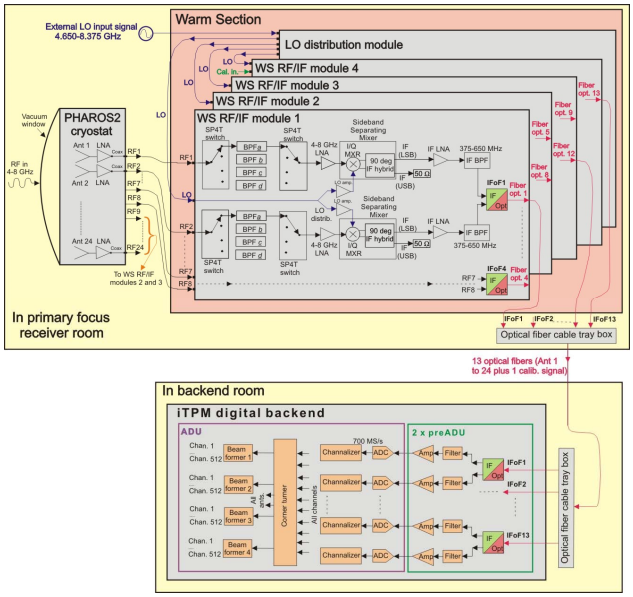

Figure 3. Schematic diagram of PHAROS2.

RF range:	4.0-8.0 GHz
Frequency downconversion type:	Single, with sideband separation mixer (2SB), LSB tuning
LO frequency range:	4.650-8.375 GHz
IF frequency range:	375-650 MHz (275 MHz instantaneous bandwidth)
N. of active antenna elements:	24 (out of 220 Vivaldi antenna elements)
N. of compound beams:	4 (using 24 antenna elements)
N. of polarizations:	1 (single-polarization)
Selectable RF filters, frequency ranges and LO tuning frequencies:	Selection of one Band Pass Filter (BPF) out of four possible ones: ***BPF a:*** 4.0-8.0 GHz (LO tuning range 4.650-8.375 GHz); ***BPF b:*** 4.775-5.050 GHz (fixed LO, tuned at 5.425 GHz); ***BPF c:*** 5.78-6.055 GHz (fixed LO tuned at 6.43 GHz); ***BPF d:*** 6.445-6.720 GHz (fixed LO tuned at 7.095 GHz);
IF signal transportation:	Two IF signals transported over a single mode optical fiber (IFoF) using DFB laser with the Wavelength Division Multiplexing technique (1270 nm and 1330 nm)
Backend and beamforming:	iTPM digital backend capable of digitizing 32 inputs, 512 frequency channels;

Table 1. Main specification of PHAROS2.

2.1 PHAROS2 Warm Section

The PHAROS2 Warm Section (WS) performs signal filtering, conditioning and single down-conversion of a

section of the 4-8 GHz RF band down to the 375-650 MHz IF band (275 MHz instantaneous bandwidth). The WS can handle up to 32 RF input signals, of which only 24 (plus one for calibration) will be used. A 3D view showing the design of the WS rack equipped with its modules is given in Fig. 4. The WS includes 4×WS RF/IF modules, one LO distribution module and one Fiber-Ethernet media converter for remote monitoring and control.

Each of the WS RF/IF modules (design details shown in Fig. 5) incorporates a PCB and four WDM fiber-optic transmitters ("OTXs"). The module has eight RF inputs (4-8 GHz), one LO input (single tone, tunable across 4.650-8.375 GHz) and four WDM IFoF outputs provided by four OTXs. Each of the channels of the eight-channel WS RF/IF modules utilize a four-way pre-selecting RF bandpass filtering (BPF) section selectable by two SP4T switches in cascade with a sideband separating (2SB) mixer operated in single downconversion LSB mode. The 2SB mixer consists of a commercial I/Q mixer followed by a 90 deg IF hybrid. The USB output of the IF hybrid is internally terminated.

One of the four BPF filters is designed to cover the broad 4-8 GHz band (*BPF a*)[1], while the other three filters (*BPF b, c* and *d*) have ≈275 MHz "narrowband" bandpass centered around astronomical lines (see Fig. 3 and Tab. 1 for details). Selection of one of the narrowband filters provides an image sideband rejection greater than 50 dB as a result of the combined effects of the filter rejection (≥30 dB for USB to LSB frequency separation of $2\times f_{IF}=2\times 375\text{-}650$ MHz) and of the 2SB mixer rejection (≥20 dB).

The 375-650 MHz IF signals are further amplified and filtered before injection in the WDM OTXs. The switches of the four WS RF/IF modules are selected in parallel to the same BPF switching position, so that the same section of the RF band is simultaneously chosen in all modules.

The WS RF/IF module adopts a single four-layer PCB with surface-mount commercial components and is supported by a mechanical housing made of aluminum. All components are soldered in place (no bonding required). The board is easy to assemble, can be made at relatively low-cost and it is biased with a single voltage (+5 V). The PCB includes one input for the LO signal that is internally distributed with one eight-way splitter. Equal electrical LO path lengths, LO filtering section and LO amplification stages are used in the LO signal chains of the PCB.

The four WS RF/IF modules receive a copy of the same LO signal from the LO distribution module (visible in Fig. 4) so that all mixers are pumped under identical conditions.

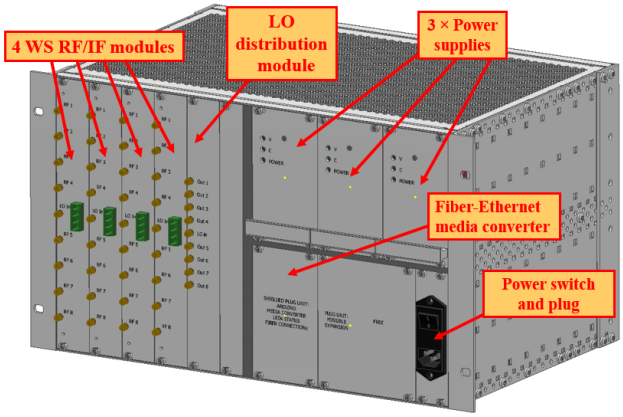

Figure 4. Design of PHAROS2 Warm Section.

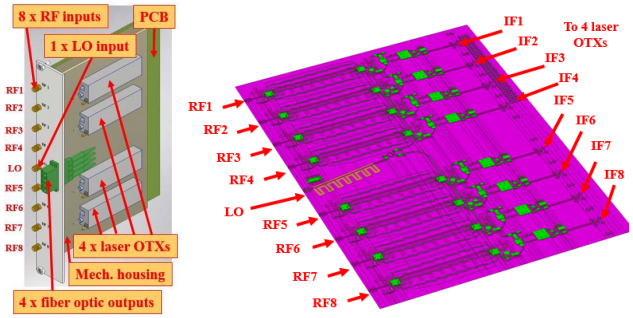

Figure 5. Left: Design of one of the WS RF/IF modules, which incorporates a PCB and four WDM fiber optics transmitters. Right: view of PCB layers and of RF/LO/IF components. The size of the PCB is 160 mm×233.4 mm.

2.2 PHAROS2 iTPM Digital Backend

The PHAROS2 digital backend is based on iTPM [5, 6, 7], a digital platform developed in Italy for the backend of the new generation SKA Aperture Arrays, capable of digitizing 32 analog inputs, each with ≈500 MHz bandwidth. The platform is the result of a collaboration between five INAF Departments and was supported by industrial partners.

The iTPM receives the analog WDM fiber optic signals from the Warm Section. The iTPM consists of one ADU (Analog Digital Unit) board and two pre-ADU boards. Each pre-ADU utilizes 8×WDM optical receivers ("ORXs") that perform the demultiplexing of 16 IF signals. In total, the two pre-ADU boards demultiplex 32×IF signals and feed them to the single ADU.

The ADU includes an analog part responsible for the acquisition and conversion of the antennas signals, and a digital part accomplishing high performance filtering and pre-processing of the data. In particular, the ADU is based on 16 dual-ADCs (AD9680, JESD204B, 1GS/s, ENOB=10.8) and two FPGAs (Xilinx Ultrascale XCU40 20 nm). The digitization is performed at ≈700 MS/s, thus the 375-650 MHz band is sampled in the second Nyquist zone. We note that, because of the PHAROS2 architecture, the signals are reversed twice: the first one by performing LSB tuning in the WS module, the second one by sampling in the second Nyquist zone, thus resulting in non-reversed passbands. The ADU employs two DDR3 96 bit memory banks, 6+6 Gbit total size and performs a channelization in 512 channels. It provides two 40 Gbps Ethernet interfaces

[1] Band *a* (*BPF a*) of the WS RF/IF modules can be extended from 4-8 GHz to 2.5-8.5 GHz to match the frequency coverage of the commercial I/Q mixer (Analog Device HMC8193).

(QSFP), one for each FPGA and manages the clock distribution and memory storage. High-speed internal bus connects the two FPGAs (25 Gbps + 25 Gbps bidirectional).

The PHAROS2 digital backend requires management 25 IF inputs (24 plus one calibration signal) across 375-650 MHz. The ADU is used for digitization and channelization with oversampled PFB (polyphaser filter bank) providing 512 sub-bands (≈0.68 MHz/channel) in complex representation through FFT. An oversampling factor by 32/27 is used to avoid discontinuity near the edges of the channels. The beamforming is implemented in the iTPM FPGAs for 24 single-polarization elements, four beams, each with ≈275 MHz bandwidth. Each beam is provided with integrated spectra (pulsar search, on-the-fly mapping) and with non-integrated spectra (pulsar timing). Figure 6 shows a schematic diagram depicting how such implementation, requiring modification to the firmware, will be performed in the PHAROS2 iTPM-FPGAs.

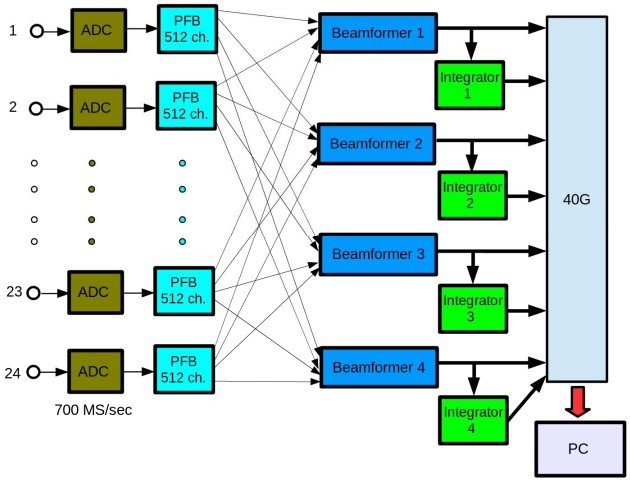

Figure 6. Implementation of PHAROS2 digital backend with beamforming performed in the iTPM-FPGAs.

3. Conclusion

The development of PHAROS2, a cryogenically cooled Phased Array Feed with digital backend for the 4-8 GHz band, is underway. The design of the PHAROS2 Warm Section and digital backend has been presented.

4. Acknowledgements

We thank Dr. Sandro Pastore from the company Sanitas EG, Milan, Italy, and Dr. Monica Alderighi and Dr. Sergio D'Angelo from INAF-Institute of Space Astrophysics and Cosmic Physics, Milan, Italy, for their support in the development of the iTPM digital backend.

5. References

1. J. Simons, J.G. Bij de Vaate, M.V. Ivashina, M. Zulliani, V. Natale, N. Roddis, "Design of a Focal Plane Array system at cryogenic temperatures," Antennas and Propagation, EuCAP 2006, Nice, France, Nov. 2006.

2. L. Liu and K. Grainge, "Realization of phased arrays for reflector observing systems," 2017 XXXIInd General Assembly and Scientific Symposium of the International Union of Radio Science (URSI GASS), Montreal, QC, 2017, pp. 1-4. doi: 10.23919/URSIGASS.2017.8105014.

3. L. Liu, K. Grainge, A. Navarrini, "Analysis of Vivaldi array antenna for phased array feeds application," International Conference on NEMO, IEEE MTT-S, Sevilla, Spain, 17-19 May, 2017, doi 10.1109/NEMO.2017.7964244.

4. L. Liu, K. Grainge, A. Navarrini, "PHasedArrays for Reflector Observing Systems and its upgrade," Proceedings of this conference.

5. G. Naldi, G. Comoretto, R. Chiello, S. Pastore, A. Mattana, A. Melis, R. Concu, M. Alderighi, J. Monari, A. Navarrini, F. Schillirò, K. Zarb Adami, "Development of a digital signal processing platform for the Square Kilometre Array," Proceedings of this conference.

6. G. Naldi et al. "The Digital Signal Processing Platform for the Low Frequency Aperture Array: Preliminary Results on the Data Acquisition Unit", *J. Astron. Instrum.*, 06, 1, March 2017, doi: 10.1142/S2251171716410142.

7. G. Comoretto et al. "The Signal Processing Firmware for the Low Frequency Aperture Array", *J. Astron. Instrum.*, 06, 1, March 2017, doi: 10.1142/S2251171716410154.