UCLA
Adaptive Optics for Extremely Large Telescopes 4 – Conference Proceedings

Title
Implementation of SCAO for ELT-CAM / MICADO-MAORY

Permalink
https://escholarship.org/uc/item/76h9w6q8

Journal
Adaptive Optics for Extremely Large Telescopes 4 – Conference Proceedings, 1(1)

Authors
Clenet, Yann
Esposito, Simone
Buey, Tristan
et al.

Publication Date
2015

DOI
10.20353/K3T4CP1131579

Peer reviewed

eScholarship.org Powered by the California Digital Library
University of California

Implementation of SCAO for ELT-CAM / MICADO-MAORY

Clénet Y.[a] and Esposito S.[b] and Buey T.[a] and Riccardi A.[b] and Rousset G.[a] and Lombini M.[c] and Cohen M.[d] and Spanò P.[b] and Gendron E.[a] and Diolaiti E.[c] and Davies R.[e]

[a]LESIA, Observatoire de Paris, PSL Research University, CNRS, Sorbonne Universités, UPMC Univ. Paris 06, Univ. Paris Diderot, Sorbonne Paris Cité, 5 place Jules Janssen, 92195 Meudon, France;
[b]Arcetri Astrophysical Observatory, INAF, Largo Enrico Fermi, 5, 50125 Firenze, Italy;
[c]Bologna Astronomical Observatory, INAF, Via Ranzani, 1, 40127 Bologna BO, Italy;
[d]GEPI, Observatoire de Paris, PSL Research University, CNRS, Univ. Paris Diderot, Sorbonne Paris Cité, 5 place Jules Janssen, 92195 Meudon, France;
[e]Max Planck Institute for Extraterrestrial Physics, Giessenbachstrasse 1, 85748 Garching, Germany

ABSTRACT

ELT-CAM is the E-ELT first-light instrument that associates MICADO, the near-infrared imager, and MAORY, its multi-conjugate adaptive optics (MCAO) module. ELT-CAM will also come with a single conjugate adaptive optics (SCAO) capability motivated by scientific programs for which SCAO provides the best AO performance (e.g. exoplanets, solar system science, bright AGNs, etc).

This SCAO capability will be developed within MICADO through a dedicated SCAO module with its natural guide star (NGS) wavefront sensor (WFS), allowing MICADO to work in a SCAO stand-alone mode without MAORY, and inside MAORY with the same dedicated NGS WFS. MICADO and MAORY consortia are working together on the development of this SCAO capability in order to perform a WFS trade-off study between Shack-Hartmann and Pyramid, to optimize the design of the NGS WFS as well as the interfaces between the two instruments. We present here the current status of the work done by the two consortia on the implementation of this SCAO capability for MICADO and MAORY.

Keywords: E-ELT, SCAO, MICADO, MAORY, design

1. INTRODUCTION

1.1 MICADO

1.1.1 The MICADO project

MICADO (Multi-AO Imaging Camera for Deep Observations) is the European Extremely Large Telescope (E-ELT) first-light imager, working at the telescope diffraction limit in the near-infrared (Davies et al., 2010). This ten-year project has now officially started, with a kick-off meeting on October 6, 2015.

The consortium is lead by R. Davies, from the Max Planck Institute for Extraterrestrial Physics (MPE), and comprises, in addition to MPE, the Max Planck Institute for Astronomy (MPIA), the University Observatory Munich (USM), the Institute for Astrophysics of Göttingen, the Netherlands Research School for Astronomy (NOVA), the Institut National des Sciences de l'Univers (INSU, acting on behalf of LESIA, GEPI and IPAG), the A* Austrian partnership and the Istituto Nazionale di Astrofisica (INAF).

Further author information, send correspondence to Y. Clénet, e-mail: yann.clenet"at"obspm.fr

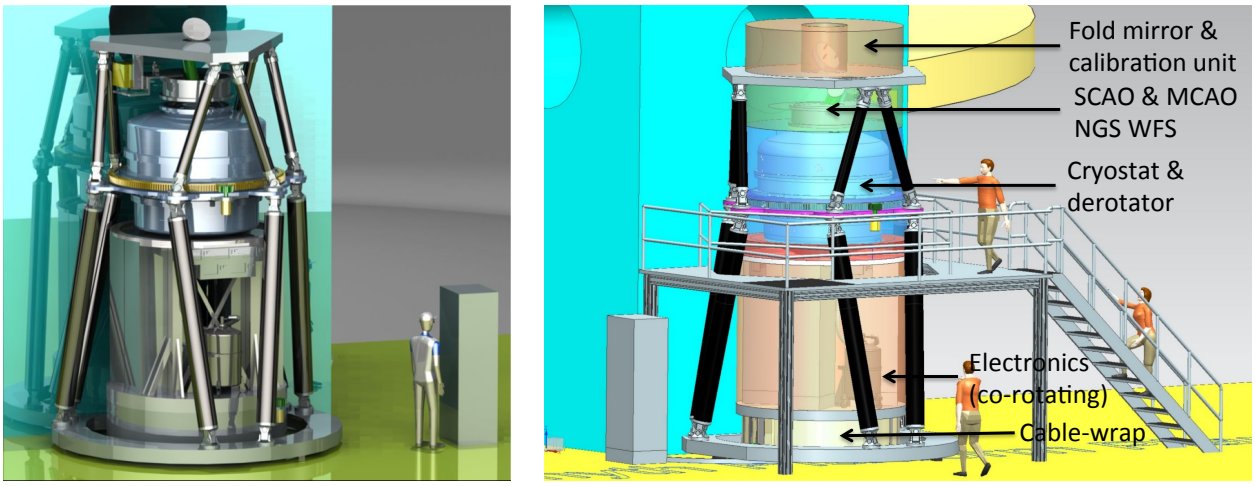

Figure 1. Left: engineering drawing of MICADO in stand-alone mode at the E-ELT. Right: MICADO design spaces and envelops.

1.1.2 The MICADO observing modes

MICADO is being designed to provide four key capabilities: imaging, astrometric imaging, spectroscopy and high contrast imaging.

MICADO will provide images in the near-infrared, between 0.8 and 2.4 μm. More than 30 broad-band and narrow-band filters will be available to cover the numerous science cases that such an E-ELT first-light instrument has to address. The default pixel size will be 4 mas, associated with a field of view of $\approx 50'' \times 50''$, allowing the instrument to work at the diffraction limit of the telescope in the H and K bands. A zoom mode, with a 1.5 mas pixel size over of field of view of $\approx 20'' \times 20''$, will be available to work at the telescope diffraction limit over the whole MICADO's bandpass as well as to increase the instrument astrometric precision. Hence, MICADO will have a sensitivity similar to JWST with a six times better spatial resolution.

MICADO aims at bringing astrometry into mainstream. The instrument will be designed for that purpose: in a gravity-invariant configuration, it will make use of only fixed mirrors and specific calibration procedure will be developed. The goal is hence to reach 50 microarcsecond precision across the full MICADO field of view, which translates into 10 microarcseconds per year after 3-4 years of observation, i.e. 5 km/s at 100 kpc distance. Based on a study done using GeMS/GSAOI (Rigaut et al., 2014) data, Fritz et al. (2015) estimate that absolute proper motion measurement errors with MICADO could be reduced down to 1 km/s at a distance of 100 kpc for 5 year observation baseline.

MICADO will also come with spectroscopic capabilities. Using a $3''$-long slit, gratings and order-sorting filters to separate the bandpass, this mode will reach a spectral resolution of $\approx$8000 (actually a higher one for point sources) covering either the I + J bands or the H + K bands. It will then be particularly well adapted for compact sources.

The last observing mode of MICADO will be high contrast imaging, provided thanks to either the association of focal plane coronagraphs with Lyot stops, all included in the MICADO cryostat, or sparse aperture masking. It will follow the angular differential imaging scheme by having MICADO's derotator working in pupil tracking mode.

1.1.3 Adaptive optics and MICADO

Multi-conjugate adaptive optics (MCAO) will be the primary AO capability for MICADO, for which MICADO will be optimised. This MCAO capability will be provided to MICADO by the MAORY module (see Sect. 1.2).

MICADO will also work in SCAO mode, with the scientific motivation to benefit from the best Strehl ratio for single, compact bright-enough objects (e.g. exoplanets, solar system science, bright AGNs, etc). This mode

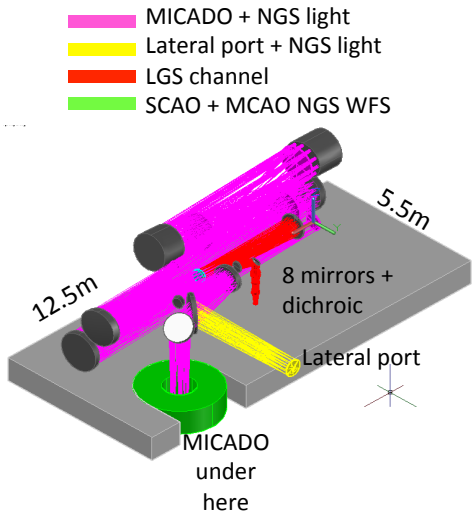

Figure 2. One option considered for the MAORY optical design and envelops.

will be provided thanks to a dedicated natural guide star (NGS) wavefront sensor, associated real-time computer functionalities and dedicated calibration tools. It will be a joint development by MICADO, having in particular the management responsibility, and MAORY, having a major role in the design and technical implementation.

The SCAO mode will be available for MICADO in stand-alone configuration, i.e. not coupled to MAORY if needed. It will also be integrated in MAORY to complement its MCAO correction.

1.2 MAORY

MAORY (Multi-conjugate Adaptive Optics RelAy) is the E-ELT multi-conjugate adaptive optics module (Diolaiti et al., 2015) and is part of the E-ELT first-light suite. It will enable near-infrared instruments attached to the E-ELT, in particular MICADO, to benefit from laser guide star adaptive optics assisted observing. This ten-year project has now officially started, with an agreement signed between INAF and the European Southern Observatory (ESO) on December 10, 2015. The kick-off meeting is expected in February 2016.

The consortium is lead by E. Diolaiti, from the Bologna Astronomical Observatory and comprises, in addition to the latter, the Arcetri Astrophysical Observatory and IPAG (represented by INSU).

In addition to MICADO, MAORY will be able to provide MCAO correction to a second instrument through a dedicated port.

The MAORY MCAO correction will be obtained by using the six E-ELT laser guide stars and three natural guide stars, each of these nine guide stars having in MAORY its dedicated WFS. The NGS WFSs will have two channels: one with a Shack-Hartmann in the infrared for fast, low order sensing and one with a pyramid in the visible for slow reference sensing. The field of view covered by these NGS WFSs is a ring with an outer diameter of $2.6'$ and an inner diameter avoiding to vignette MICADO.

The MAORY MCAO correction will be also obtained by implementing in the AO module post-focal deformable mirrors, one as a baseline, two as a goal.

The MAORY performance requirement in the $50''$ MICADO field of view is to reach a Strehl ratio of 30% at K with a 50% sky coverage, with a goal of a Strehl ratio of 50% at K, still with a 50% sky coverage.

2. IMPLEMENTATION OF SCAO

2.1 MICADO-MAORY interface: the Green Doughnut

We agreed between MICADO and MAORY to jointly develop the SCAO WFS. To ensure an implementation that would be common to the stand-alone phase and the situation when MICADO is coupled to MAORY, we have

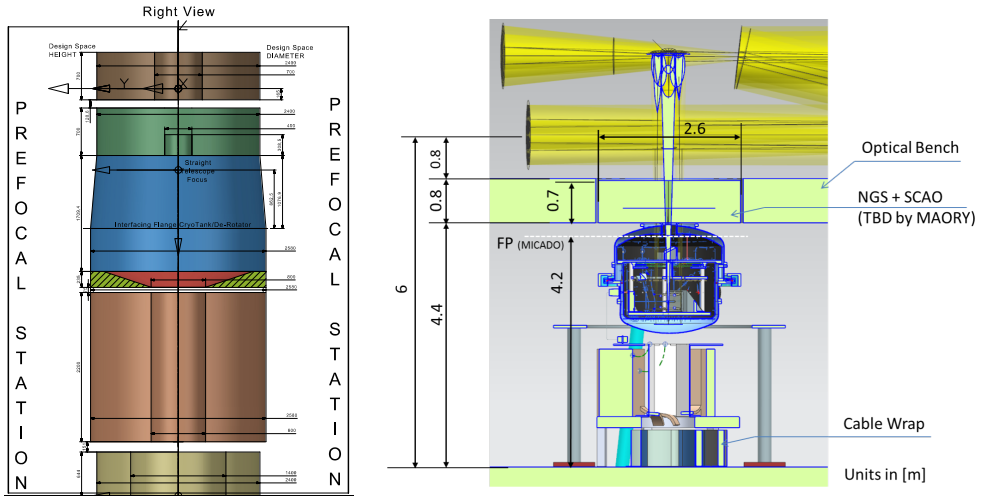

Figure 3. Left: envelops of the MICADO subsystems in stand-alone mode. Right: envelops when MICADO is coupled to MAORY.

defined a common volume interface, hereafter called "the Green Doughnut" (GD) where would be integrated the SCAO WFS and the MCAO NGS WFSs.

The height of this volume, 0.7 m, was limited at that time by the E-ELT back focal length for MICADO in stand-alone phase (2.5 m). Note that since the AO4ELT4 conference, this E-ELT back focal length has been modified by ESO to 1 m, which in practice implies to use an optical relay between MICADO in stand-alone mode and the telescope and then might relax the height constraint on the GD.

The diameter of the defined envelop had been fixed to 2.6 m, here again to account for the available space for MICADO in stand alone mode, when MICADO could be interfaced to the telescope with a single mirror, given the previous 2.5 m E-ELT back focal length. This dimension might also be relaxed with the new E-ELT back focal length. The GD envelop will be reassessed rapidly but won't dramatically change.

Several constraints exist to implement in practice the SCAO and MCAO NGS WFSs in the GD. We list them below.

For the MCAO NGS WFSs, the major constraint is to keep unvignetted each NGS WFS probe patrol field of view of $1' \times 2'$.

For the SCAO WFS, the constraints are:

- to keep a limited angle of incidence on the SCAO dichroic plate in order to prevent a degraded image quality in the science optical path,
- to ensure a SCAO transmitted field of view of $\pm 2.5''$,
- to allocate the needed space between the first focal point after the dichroic plate and the first folding mirror after this dichroic plate, in order to allow the insertion of the internal calibration source that will be used for calibrating the reference slopes.

For MICADO itself, the constraint is to keep unvignetted its $50'' \times 50''$ field of view.

2.2 First possible implementation of SCAO in the Green Doughnut

In the first possible implementation of SCAO in the GD we contemplate, the MCAO NGS and SCAO WFS are on either side of the same optical bench, with the MCAO NGS WFSs above and the SCAO WFS below, upside down.

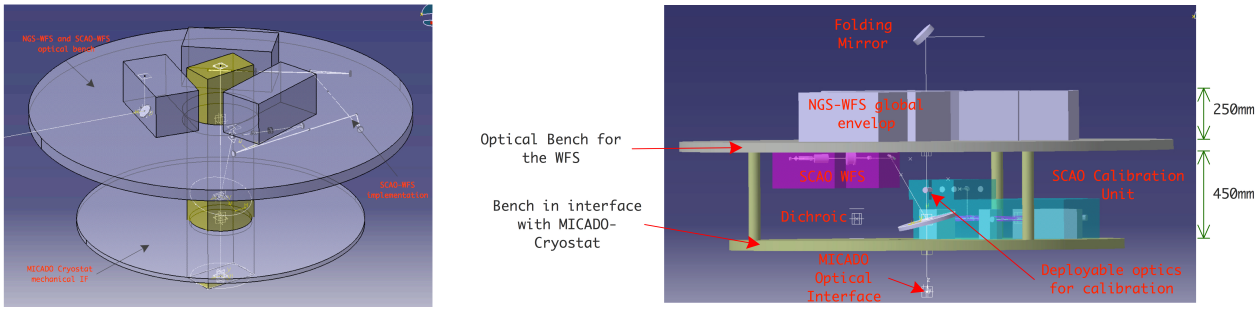

Figure 4. Engineering drawing of the first possible implementation of SCAO in the GD, with the MCAO NGS WFSs in the upper part and the SCAO WFS in the bottom part of the GD.

Considering a 15° incidence angle on the SCAO dichroic plate for image quality preservation, the MCAO NGS WFSs occupy the upper one third part of the GD while the SCAO WFS occupies the bottom two third part of the GD.

It is to be noted that this SCAO WFS volume in the GD also hosts the associated SCAO calibration unit, supported by a second optical bench. The latter is below the main bench on which are attached the SCAO and MCAO NGS WFSs. This calibration unit aims at:

- enabling the alignment of the WFS
- testing the WFS performance
- closing the SCAO loop, calculating interaction matrices, checking fast loops
- controlling the closed-loop performance
- allowing stand-alone routine testing independently of the telescope
- calibrating the non common path aberrations

For these purposes, the calibration unit will host dedicated visible and infrared light sources, pupil masks, phase screens, a deformable mirror (with a moderate number of actuators) and a tip-tilt mirror.

A deployable optics allows one to feed MICADO with the SCAO calibration unit beam. Alternatively, MICADO is fed by the E-ELT beam (or the MICADO calibration unit beam, this calibration unit being located upstream).

2.3 Second possible implementation of SCAO in the Green Doughnut

In the second possible implementation of SCAO in the GD we contemplate, the MCAO NGS and SCAO WFSs are both above an optical bench supporting the MCAO NGS WFSs, the SCAO WFS being atop.

The MCAO NGS WFSs are mounted on commercial stages, with a travel range of 400 mm×400 mm, to allow field patrolling.

The SCAO (pyramid) WFS is supported by a smaller board, above the MCAO NGS WFSs. This board is deployable to avoid MAORY technical field vignetting and removable for maintenance. The design of a support structure for this board, in the upper part of the GD, is still to be done.

The mirror picking off the light for the SCAO optical path has to be mounted on a motorized stage to avoid the partial vignetting of the MCAO NGS WFSs field of view.

In this design, the SCAO WFS envelop slightly exceeds the GD volume of 38 mm in its upper part.

Room remains below the main optical bench, allowing to use mechanical stages to make the dichroic plate deployable.

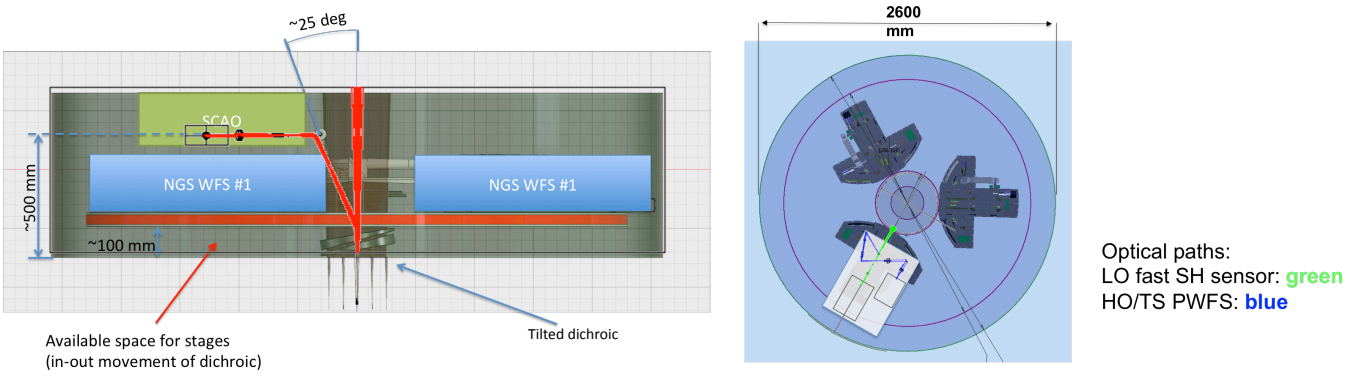

Figure 5. Engineering drawing of the second possible implementation of SCAO in the GD, with the SCAO WFS in the upper part and the MCAO NGS WFSs in the bottom part of the GD.

3. CONCLUSIONS

Making independent designs, the MICADO and MAORY teams have shown that implementing the SCAO WFS and the MCAO NGS WFSs in the GD is feasible.

After an analysis of both designs, they will jointly work on a common design that takes into account all the requirements and constraints.

References

Davies, R., Ageorges, N., Barl, L., et al. 2010, Proceedings of the SPIE, 7735, id. 77352A

Diolaiti, E., Agapito, G., Antichi, J., et al. 2015, this conference

Fritz, T., Kallivayalil, N., Carrasco, R., et al. 2015, this conference

Rigaut, F., Neichel, B., Boccas, M., et al. 2014, MNRAS, 437, 2361