PROCEEDINGS OF SPIE

SPIEDigitalLibrary.org/conference-proceedings-of-spie

Instrument workstation for the EGSE of the Near Infrared Spectro-Photometer instrument (NISP) of the EUCLID mission

Trifoglio, M., Gianotti, F., Conforti, V., Franceschi, E., Stephen, J., et al.

M. Trifoglio, F. Gianotti, V. Conforti, E. Franceschi, J. B. Stephen, A. Bulgarelli, V. Fioretti, E. Maiorano, L. Nicastro, L. Valenziano, A. Zoli, N. Auricchio, A. Balestra, D. Bonino, C. Bonoli, F. Bortoletto, V. Capobianco, T. Chiarusi, L. Corcione, S. Debei, A. De Rosa, S. Dusini, F. Fornari, F. Giacomini, G. P. Guizzo, S. Ligori, A. Margiotta, N. Mauri, E. Medinaceli, G. Morgante, L. Patrizii, C. Sirignano, G. Sirri, F. Sortino, L. Stanco, M. Tenti, "Instrument workstation for the EGSE of the Near Infrared Spectro-Photometer instrument (NISP) of the EUCLID mission," Proc. SPIE 9904, Space Telescopes and Instrumentation 2016: Optical, Infrared, and Millimeter Wave, 990460 (29 July 2016); doi: 10.1117/12.2234219

Event: SPIE Astronomical Telescopes + Instrumentation, 2016, Edinburgh, United Kingdom

SPIE.

Downloaded From: https://www.spiedigitallibrary.org/conference-proceedings-of-spie on 01 Jun 2020 Terms of Use: https://www.spiedigitallibrary.org/terms-of-use

Instrument Workstation for the EGSE of the Near Infrared Spectro-Photometer instrument (NISP) of the EUCLID mission

M. Trifoglio*[a], F.Gianotti[a], V. Conforti[a], E. Franceschi[a], J.B. Stephen[a], A. Bulgarelli[a], V. Fioretti[a], E. Maiorano[a], L. Nicastro[a], L. Valenziano[a], A. Zoli[a], N. Auricchio[a], A. Balestra[e], D. Bonino[c], C. Bonoli[e], F. Bortoletto[e], V. Capobianco[c], T. Chiarusi[b], L. Corcione[c], S. Debei[i], A. De Rosa[a], S. Dusini[g], F. Fornari[b,f], F. Giacomini[d], G.P. Guizzo[i], S. Ligori[c], A. Margiotta[b,f], N. Mauri[b], E. Medinaceli[e], G. Morgante[a], L. Patrizii[b], C. Sirignano[g,h], G. Sirri[b], F.Sortino[a], L. Stanco[g], M. Tenti[d]

[a]Istituto Nazionale di Astrofisica – Istituto di Astrofisica Spaziale e Fisica Cosmica, Via Piero Gobetti 101, 40129 Bologna, Italy;
[b]Istituto Nazionale di Fisica Nucleare – Sezione di Bologna, Viale Carlo Berti Pichat 6/2, 40127 Bologna, Italy;
[c]Istituto Nazionale di Astrofisica – Osservatorio Astrofisico di Torino, Strada Osservatorio 20, 10025 Pino Torinese (TO), Italy;
[d]Istituto Nazionale di Fisica Nucleare – CNAF - Viale Carlo Berti Pichat 6/2, 40127 Bologna, Italy
[e]Istituto Nazionale di Astrofisica – Osservatorio Astronomico di Padova, Vicolo Osservatorio 5, 35122 Padova, Italy
[f]Department of Physics & Astronomy, University of Bologna, Viale Carlo Berti Pichat 6/2, 40127 Bologna, Italy
[g]Istituto Nazionale di Fisica Nucleare – Sezione di Padova, Via Marzolo 8, 35131 Padova, Italy
[h]Department of Physics & Astronomy, University of Padova, Via Marzolo 8, 35131 Padova, Italy
[i]CISAS - Centro di Ateneo di Studi ed Attività Spaziali "Giuseppe Colombo", via Venezia, 15, 35131 Padova, Italy

ABSTRACT

The NISP instrument on board the Euclid ESA mission will be developed and tested at different levels of integration using various test equipment which shall be designed and procured through a collaborative and coordinated effort. The NISP Instrument Workstation (NI-IWS) will be part of the EGSE configuration that will support the NISP AIV/AIT activities from the NISP Warm Electronics level up to the launch of Euclid. One workstation is required for the NISP EQM/AVM, and a second one for the NISP FM. Each workstation will follow the respective NISP model after delivery to ESA for Payload and Satellite AIV/AIT and launch. At these levels the NI-IWS shall be configured as part of the Payload EGSE, the System EGSE, and the Launch EGSE, respectively. After launch, the NI-IWS will be also re-used in the Euclid Ground Segment in order to support the Commissioning and Performance Verification (CPV) phase, and for troubleshooting purposes during the operational phase.
The NI-IWS is mainly aimed at the local storage in a suitable format of the NISP instrument data and metadata, at local retrieval, processing and display of the stored data for on-line instrument assessment, and at the remote retrieval of the stored data for off-line analysis on other computers.
We describe the design of the IWS software that will create a suitable interface to the external systems in each of the various configurations envisaged at the different levels, and provide the capabilities required to monitor and verify the instrument functionalities and performance throughout all phases of the NISP lifetime.

Keywords: Euclid, Space Mission, EGSE, Ground Segment, Quick Look, Data Processing

*trifoglio@iasfbo.inaf.it; phone 39 0516398738; fax 39 0516398743; www.iasfbo.inaf.it

Space Telescopes and Instrumentation 2016: Optical, Infrared, and Millimeter Wave, edited by Howard A. MacEwen, Giovanni G. Fazio, Makenzie Lystrup, Proc. of SPIE Vol. 9904, 990460 · © 2016 SPIE · CCC code: 0277-786X/16/$18 · doi: 10.1117/12.2234219

Downloaded From: https://www.spiedigitallibrary.org/conference-proceedings-of-spie on 01 Jun 2020
Terms of Use: https://www.spiedigitallibrary.org/terms-of-use

1. INTRODUCTION

1.1 NISP configuration and operations

The NISP (Near Infrared Spectro-Photometer) is one of the two Euclid instruments on board the EUCLID mission[1]. It is operated in the near-IR spectral region (0.9-2μm) as a photometer and spectrometer. The Near Infrared photo-spectrometer instrument (NISP)[2] consists of the Opto-Mechanical Assembly (NI-OMA) and the Detection System (NI-DS), located in the PLM (Payload Module), and the Warm Electronics (NI-WE), hosted in the SVM (Service Module). The NI-WE is made by the Instrument Control Unit (NI-ICU), and two Data Processing Unit and Control Units (NI-DPU/DCUs). The NI-ICU is in charge of NISP instrument specific configuration and commanding. It takes care of managing the Calibration Unit (NI-CU), the Filter Wheel Assembly (NI-FWA), the Grism Wheel Assembly (NI-GWA), the Thermal Control, and the NI-DPU/DCUs. To this purpose, the NI-ICU interfaces the S/C Control And Data Management Unit (CDMU), in order to receive the Telecommands (TC) directed to those sub-systems, and to send the Housekeeping Telemetry (HKTM) generated by the instrument to the S/C Mass Memory Unit (MMU). Each NI-DPU/DCU is in charge of commanding and controlling 8 NI-SCS (detectors), acquiring data, processing and compressing frames, and delivering science data (Science TM) to the S/C MMU. The structure of the NISP TC packets and the HKTM packets is defined according to the Consultative Committee for Space Data Systems (CCSDS) standard.

The Mission Time Line (MTL) sequences the NISP operations through TCs that command the transitions among instrument modes. The following modes are envisaged: *Boot*, *Startup*, *Standby*, *Idle*, *Science*, *Manual*, and *Safe*. In all modes, after power on, NISP generates the HKTM. The Science TM is generated in Science Mode and in Manual mode during the execution of subsequent cycles of exposures. In orbit, the routine science NISP operations foresee a maximum of 19 cycles per day, each one composed by 4 dithers of 4/5 exposures each (see Figure 1), for a total maximum assigned Science TM of 240 Gbit/day. It is assumed that files generated on-board by the MMU follow a naming scheme for the individual files. This is assumed to be part of the mission planning process, providing via MTL commands a name for a file to be opened for recording on the MMU. Distinct files will be used for HKTM, NI-DPU1 Science TM, and NI-DPU2 Science TM.

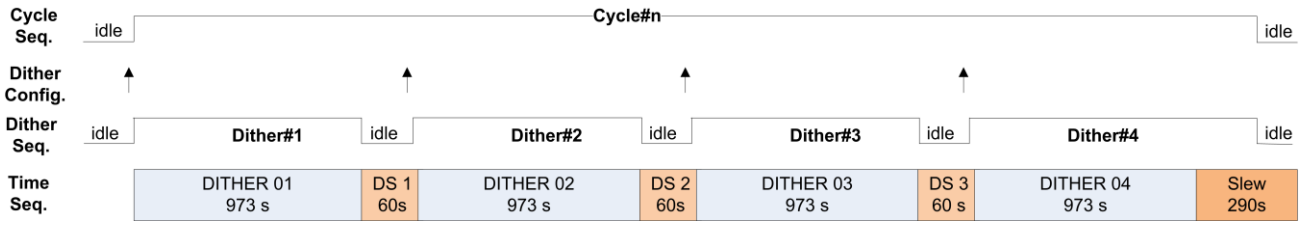

Figure 1. Normal Observation Sequence, where each cycle consists of four dithers. Each dither is composed by a spectroscopic exposure followed by three NIR photometric exposures, then a dither step is performed. At the end of the last dither, a slew dark exposure is acquired while the FoV generally slews towards either the next survey field or a calibration field with high star density. In the wide survey the spectroscopic exposures are performed with 3 different Red Grism orientations and 1 repeated after one dither step..

The NISP AIV/AIT programme will verify the NISP functionalities and performance taking into account that the basic unit of NI-DPU/DCU processing is the 'Dither', in the sense that the NI-DPU/DCU will have the autonomy to process an entire dither of exposures once properly configured. A generic exposure will be part of a dither even if it is a single exposure, moreover two configuration tables will be needed before the true exposure start in order to program the actions taken by the processing S/W: the dither configuration table and the processing parameter tables (one for each NI-DPU). Through these tables, at each starting dither the NI-DPU/DCU will receive the configuration parameters describing the organization of next dither. The relevant configuration parameters will be included by the NI-DPU/DCU in the headers of the detector exposure dataset. These headers will contain also the 32 bits identifier (PlanId) required by the Ground Segment to correlate the NISP data with the satellite maneuvers and operations. This identifier will be generated by the Ground Segment and will be received by the NI-DPUs through a dedicated TC sent to the NI-ICU.

1.2 NISP Data workflow

Figure 2 summarizes the workflow of each NI-DPU/DCU processing[3] during each cycle of the Normal Observation Sequence. Each dither shall be configured according to the configuration data sent by the NI-ICU. Each observation inside the configured dither will be started by a specific command, sent by the NI-ICU and tagged with the OBT. After

Downloaded From: https://www.spiedigitallibrary.org/conference-proceedings-of-spie on 01 Jun 2020
Terms of Use: https://www.spiedigitallibrary.org/terms-of-use

the end of each exposure, the co-added frames pre-processed by the DCU are written in the DPMEM. The NI-DPU/DCU DPMEM is a memory buffer subdivided in two identical areas, denominated Bank A and Bank B, acting as a switchable double-buffer system. Both Banks A and B have enough capacity to store one entire dither of exposures for up to 8 detectors. As soon as one full detector data are loaded in its internal memory, the NI-DPU/DCU will start processing following the configuration set-up. As soon as it is ready, one entire *single* detector processing result, plus the associated metadata, is transferred to MMU double-port memory buffer. Its size will be variable. To size the nominal dataset generated for single detector we assume a compression factor of 2, a number of 5 raw pixel line for each readout, a number of 16 readouts/frame, 1 sensor temperature value/readout. In this case the dataset will consist of: *i)* an un-compressed set of exposure telemetry parameters to allow the image identification in case of errors in the compressed header (156 byte); ii) un-compressed raw lines (4.92 Mbyte for the spectro case); *iii)* compressed science signal data (4.194 Mbyte); *iv)* compressed telemetry: analog telemetry, SCA temperatures, line error flags (432 byte); *v)* compressed science Chi-square data (2.09 Mbyte for the spectro case). This led to a total of 11.21 Mbyte/detector for spectrograph exposures, and 5.77 Mbyte/detector for photometer exposures. It is noted that the final file in the photometer case is as for the Spectrometer mode, but for: *i)* the $\chi 2$ frame that reports a compressed block of 2048x2048 logical flags obtained compressing the original 2048x2048/8 = 524288 Bytes; *ii)* the raw extra line section, which depends on the number of MACC groups; assuming 4 groups, it becomes 1310721 bytes.

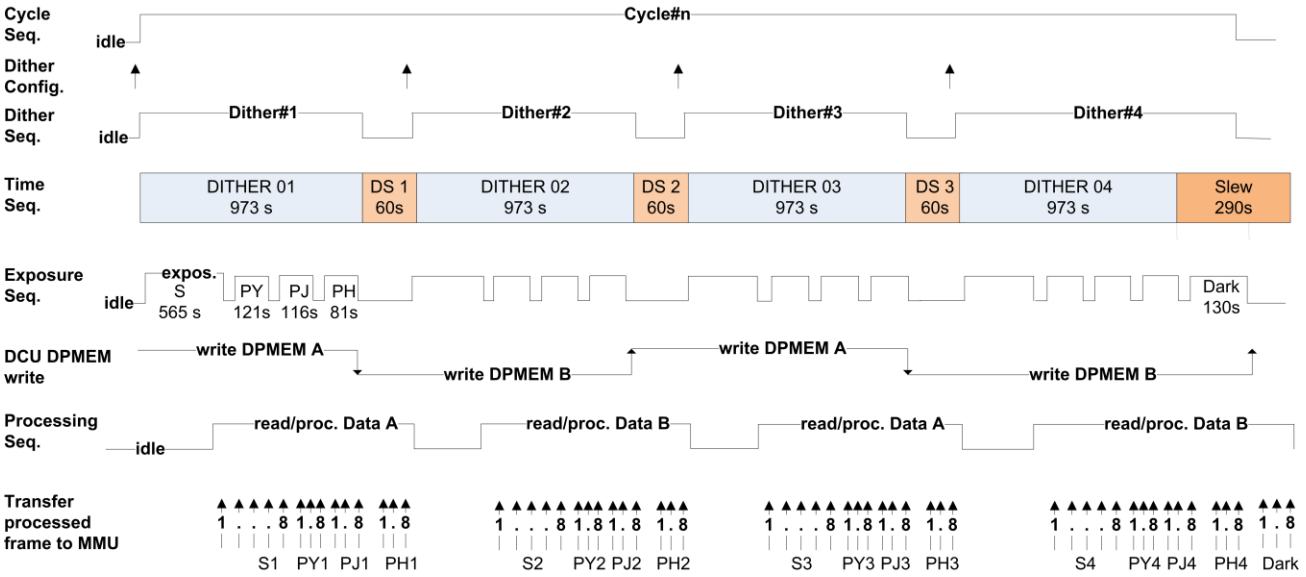

Figure 2. Data workflow of each NI-DPU/DCU processing during each cycle of the Normal Observation Sequence.

As mentioned above, the MMU stores each NI-DPU/DCU data into one Science TM file for successive download via CFDP (CCSDS File Delivery Protocol). File create/open/close operations are commanded by the CDMU upon receiving either direct ground TCs or time tagged TCs included in the Mission Timeline (MTL).

Hence, during nominal science operations the MMU is storing the NISP data in parallel on three files: one Science TM file for each NI-DPU, and one HKTM file for the NI-ICU. The number of dithers contained in each Science TM file will depend on the use case. During AIV/AIT, most of the Science TM files will host just one dither, thus allowing a quick look of the data. In flight, one single file will contain a large number of dithers in order to avoid having many small files to be managed and sent through the CFDP link. Typically the "Open File" TC is sent at the start, then a set of TCs are sent to configure and execute the exposures of N dithers, then a TC is sent to close the file.

Nonetheless, in general the time boundaries of these files may differ, and the exposures data of a given dither may be split on two consecutive files. Consequently, the NI-IWS has to properly reconstruct the Science TM and their time correlation with the HKTM by exploiting their predefined layout structures and the relevant metadata taken from the data headers.

Downloaded From: https://www.spiedigitallibrary.org/conference-proceedings-of-spie on 01 Jun 2020
Terms of Use: https://www.spiedigitallibrary.org/terms-of-use

2. PRODUCT PERSPECTIVE

2.1 EGSE Level

The NI-IWS software will run on a workstation and provide the capabilities presented in the next section. They are aimed at: (i) the local storage of the NISP instrument data and metadata in the format suitable for on-line and off-line analysis; (ii) the monitoring of the instrument data for fast verification of instrument behaviour and identification of anomalies, and the distribution of the instrument data to remote computer(s) for further off-line analysis.

The NI-IWS will be part of the Instrument EGSE, Payload EGSE, System EGSE, and Launch EGSE. In these configurations, the NI-IWS is operated and controlled locally. It is intended to be a sort of "monitor", collecting and analyzing independently the on-line data made available by the CCS either in near real time or in retrieval mode.

A comprehensive configuration for the instrument level AIV/AIT activities is shown in Figure 3. All EGSE configurations share a common architecture and application software environment based on the Euclid CCS 5 software (www.terma.com). The Central Control System (CCS) coordinates, as a single point of control, all EGSE operations. The NI-WE SCOE (Special CheckOut Equipment) simulates the missing S/C interfaces with NISP. Additional simulators (not shown) are envisaged to test the NI-WE boxes before integration with the NI-DS and the NI-OMA. Additional equipment (in red) are part of the facilities (Verification Ground System - VGS)[5] available at LAM (France) for the NISP performance tests in the thermal vacuum chamber. The Telescope Simulator SCOE (VGS-TS SCOE) controls an optical source that injects light into NISP for optical performance tests.

The Database Builder Computer (DBC) is in charge of collecting all NISP data received from the NI-IWS, and all the test environmental and setup data gathered from the VGS sensors installed in the Thermal-Vacuum chamber.

Further details on the NISP Instrument EGSE are given in [4].

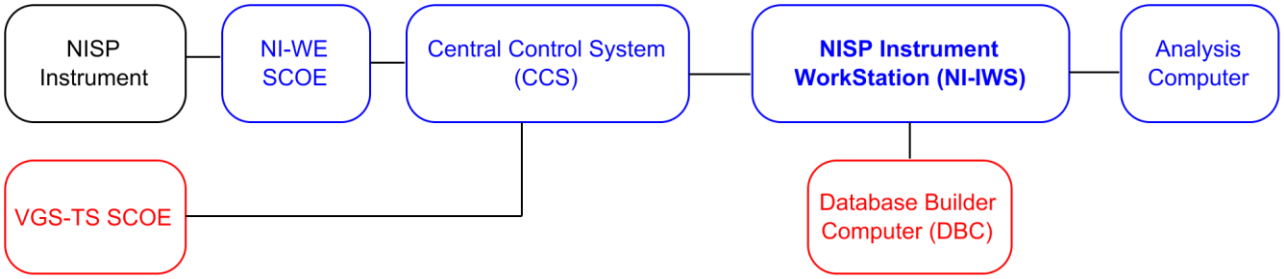

Figure 3. NISP Instrument Workstation perspective at instrument EGSE level. The blue boxes in the top represent the equipment required to verify the NISP functionalities. The red boxes in the bottom identify the additional equipment required for thermal performance test verification, before NISP delivery to ESA.

The communication among the CCS and other EGSE equipment is based on a Client/Server model using the EDEN protocol. This protocol supports the exchange of CCSDS TC and HKTM packets with the NI-WE SCOE for the up-linking/down-linking to/from NISP. EDEN is designed to transport the same kind of TC and HKTM packets also to control and monitor the SCOEs. In addition, this protocol allows the CSS to forward on request to the NI-IWS, in near real time and packet by packet: *i)* a copy of the HKTM packets generated by the NISP instrument and by the VGS-TS SCOE; *ii)* a copy of the TC echo (TC-E) generated by the NI-WE SCOE for each TC emitted towards NISP; *iii)* a copy of the TC-E generated by the VGS-TS SCOE to notify the execution of the SCOE TC received from the CCS. The data field of the TC-E message contains a copy of the TC packet and additional information such as the time the TC was emitted by the NI-WE SCOE (case *ii*) or the time it was received by the VGS-TS SCOE (case *iii*).

In retrieval mode, the NI-IWS has on-line access to the NISP Science TM files created by the MMU emulator installed on the NI-WE SCOE, and to the HKTM/TC-E packets stored in the CCS archive. In turn, the NI-IWS makes available both the raw data and the processed data to remote computer(s).

2.2 Ground Segment Level

The use of the NI-IWS at the Mission Operation Centre (MOC) of the Euclid Ground Segment is limited to no-routine operations. It is mainly envisaged to support NISP Instrument Operation Team (IOT) during Commissioning Phase and

Downloaded From: https://www.spiedigitallibrary.org/conference-proceedings-of-spie on 01 Jun 2020
Terms of Use: https://www.spiedigitallibrary.org/terms-of-use

for contingencies where Survey is stopped. The actual interfacing among the NI-IWS and the MOC has not been defined yet. It should be based on a Client/Server model in the framework of the EGOS Data Dissemination System (EDDS).

MOC is expected to provide NISP Real Time HKTM information (RT HKTM) and TC History to the NI-IWS. RT HKTM is in the format from which the source telemetry packets generated on-board can be extracted. In retrieval mode, MOC should make available to the NI-IWS: *i)* a buffer containing as minimum the last acquired 14 days of the NISP Science TM files; *ii)* the stored HKTM information in form of files as recorded in the MMU on-board; *iii)* the TC History for a given operational period at the same time as the stored HKTM for this period. TC History lists all TCs and their success.

At the time of writing, we assume that, from the functional point of view, the services provided to the NI-IWS by MOC are equivalent to those provided by the CCS at EGSE level. Nonetheless, the operation modalities and the communication protocols are likely to be different. The NI-IWS design has to account for these differences.

3. GENERAL CAPABILITIES

This section presents the NI-IWS general capabilities required at Instrument EGSE level. They include those required at upper EGSE levels, and at Ground Segment Level. Interactions between the system and external actors are modeled in the Use Case diagram shown in Figure 4. Actors in the process, who may be human or other systems, are represented as stick figures. Each named ellipse represents a Primary use case, which identifies the individual interactions between the system and the actors. Lines link the actors with the interaction.

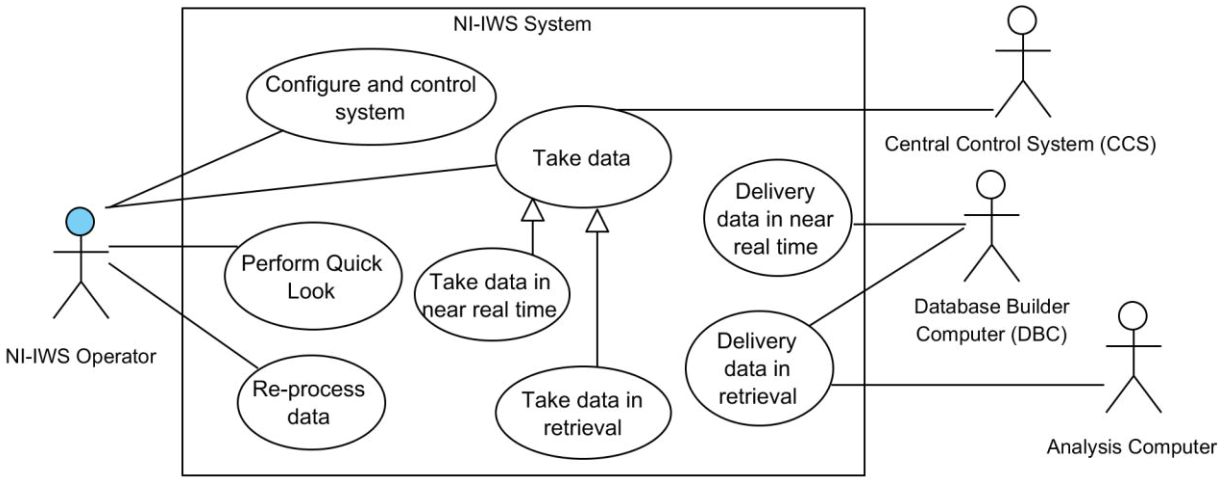

Figure 4. UML diagram of the NI-IWS Primary Use Cases

- **Configuration and Control.** This capability provides the tools required to configure the system components, to control the system states and to log the system activities.
- **Data Taking.** The NI-IWS is able to archive the NISP data received from the CCS, i.e. the Science TM files and the TM/TC-E packets exchanged by the CCS with NISP and, at LAM, with the VGS-TS SCOE. These data are stored in raw format (LV0 data) and processed on-line in order to store and make them available also in a format more suitable for on-line and off-line analysis (LV1 data). As already mentioned, two data taking modalities are envisaged: near real time and retrieval.
- **Re-process**. This capability ingests LV0 data from the archive into the NI-IWS system for the reprocessing and for generating off-line the corresponding LV1 data. This is done when the LV0 data are stored but not processed or when it is necessary to regenerate the LV1 data with different setting.
- **Quick Look**. This capability provides the monitoring and analysis tools that access the archived data and allow the operator to verify the correctness of the test results respect to the expected values, and to perform sufficient analysis so as to ensure that the NISP instrument behavior is nominal during all test phases The Quick Look is able to operate on-line, on the forthcoming data, or off-line, on the data retrieved from the archive.

Downloaded From: https://www.spiedigitallibrary.org/conference-proceedings-of-spie on 01 Jun 2020
Terms of Use: https://www.spiedigitallibrary.org/terms-of-use

- **Data Delivery**. The NI-IWS makes available for retrieval, through ftp, the LV0/LV1 data for further off-line analysis. The DBC receives automatically each file upon closure. Selected files can also be retrieved on request.

4. SOFTWARE DESIGN

The NI-IWS will run on a Linux Workstation equipped with the hardware and the software required to provide all the required functionalities and performance. This section presents the design of the application software layer that we are developing to implement the required capabilities. This layer is built on top of two main layers. The lowest layer is composed by compiler/interpreter, and standard libraries. The intermediate level defines the Framework level including the Boost Libraries (www.boost.org) and the CIWS Framework (CIWS-FW)[6]. The former consists of a set of libraries for the C++ programming language that provide support for tasks and structures such as linear algebra, pseudorandom number generation, multithreading, image processing, regular expressions, and unit testing. The latter offers a suite of libraries, modules and synchronization mechanisms devoted to the acquisition and archiving in near real time of ESA Standard TM/TC packet streams.

4.1 Context viewpoint

Figure 5 represents the external services provided by the NI-IWS software with reference to the EGSE context. It defines the boundary between the system and its environment, showing the external entities that interact with it.

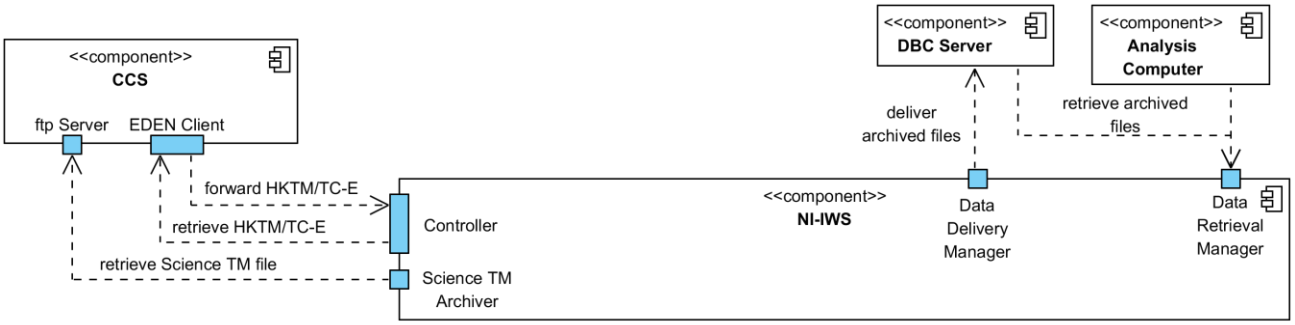

Figure 5. EGSE Context viewpoint of the NI-IWS.

A similar diagram applies to the Ground Segment context (Figure 6), where the CCS component is replaced by the SOC/MOC component. Instead of the EDEN Client, MOC uses the EDDS system mentioned above to provide the required services. It is noted that in this case the near real time forwarding is limited to RT HKTM packets.

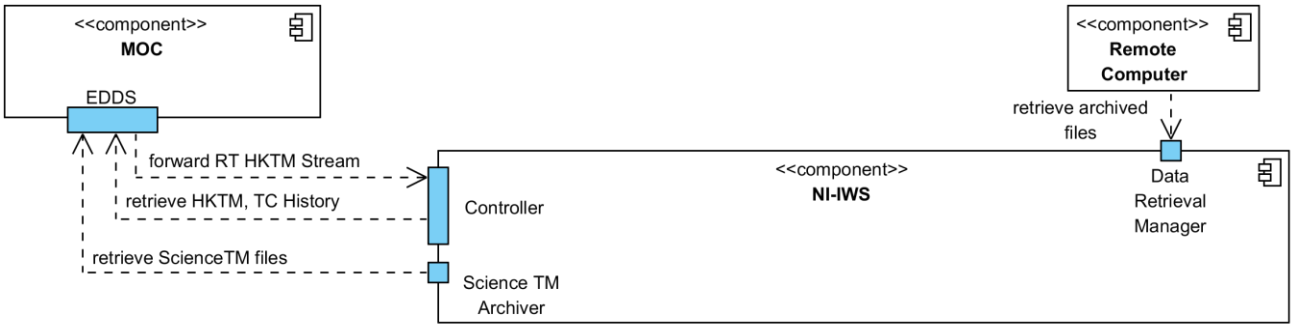

Figure 6. Ground Segment Context viewpoint of the NI-IWS.

4.2 Programming logic

The NI-IWS operative modalities will depend on the NI-IWS system state. As shown in Figure 7, three main states are envisaged: *Loaded*, *Online*, and *Offline*. After start-up the system enters the Loaded state, where the system software is loaded. A local HMI is provided to the NI-IWS Operator to configure and control the system. A second local GUI is devoted to Quick Look operations on the NISP instrument data and auxiliary data. The Online state allows the Data Taking to gather, process and archive either in near real time or in retrieval mode the data and make them accessible to

Downloaded From: https://www.spiedigitallibrary.org/conference-proceedings-of-spie on 01 Jun 2020
Terms of Use: https://www.spiedigitallibrary.org/terms-of-use

Quick Look and Data Delivery. The Offline state allows the Re-process, Quick Look and Data Delivery tasks to operate on data of previous data taking sessions.

As sketched in Figure 7, the Online state is a state machine itself (a submachine). Its initial state is the Standby state, which is reached once the NI-IWS establishes a TCP/IP link server connection with the CCS.

The *Open Session* event triggers the transition from the Standby state to the Running state and starts a new data taking session. Each Session is organized as a sequence of consecutive data runs identified by an incremental counter (*RunId*) generated automatically by the NI-IWS itself.

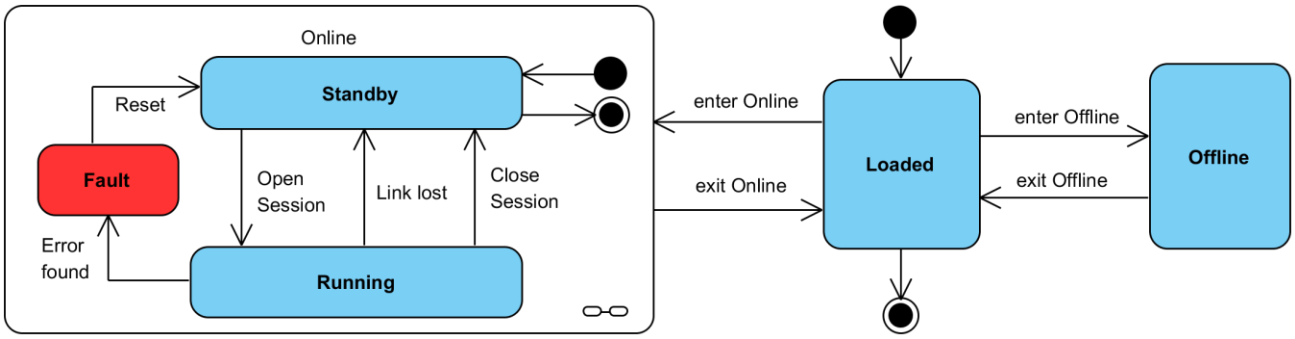

Figure 7. NI-IWS system states diagram.

The UML Session sequence diagram in the EGSE context is shown in Figure 8.

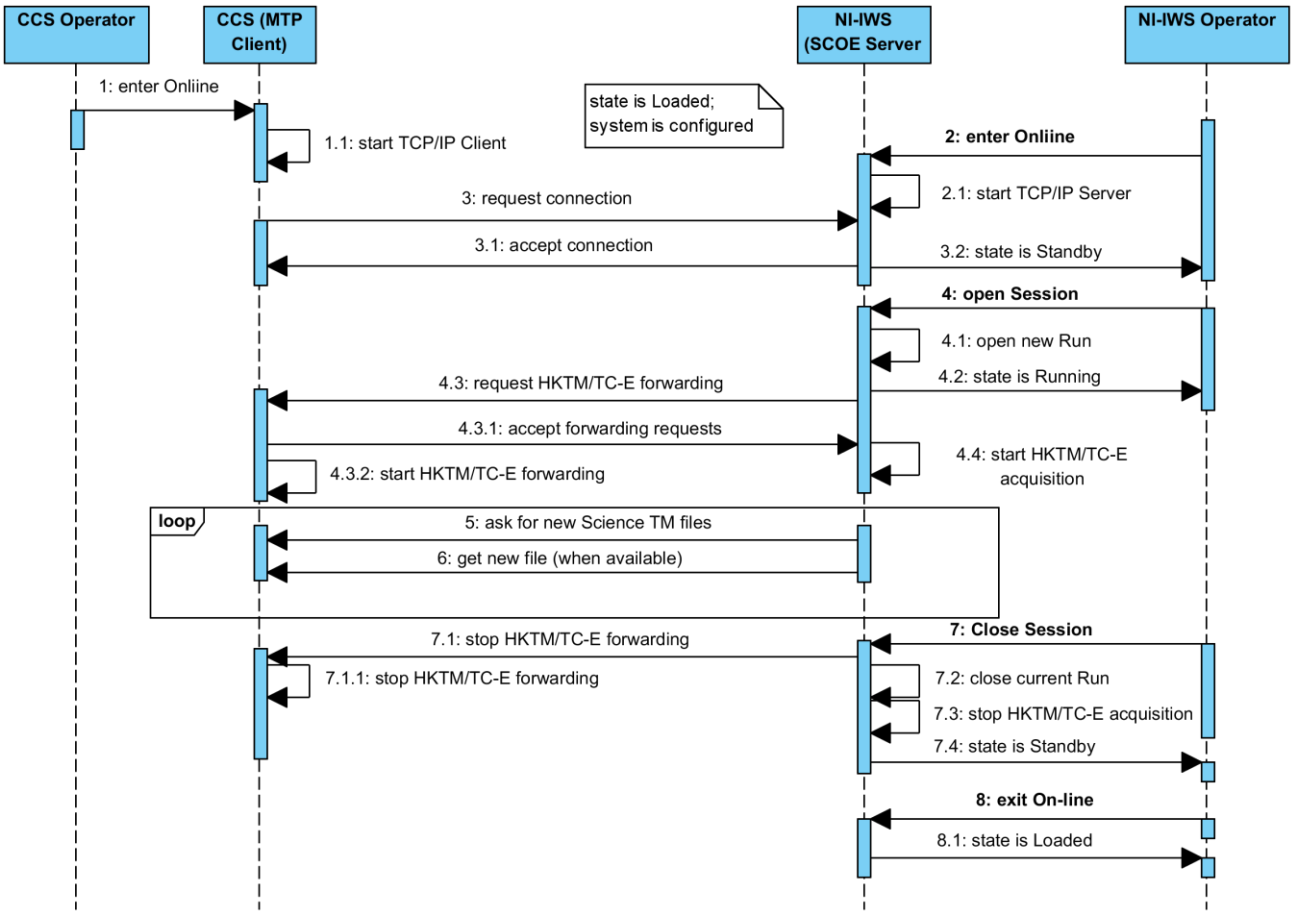

Figure 8. Sequence diagram of the NI-IWS data taking session in the EGSE context.

Downloaded From: https://www.spiedigitallibrary.org/conference-proceedings-of-spie on 01 Jun 2020
Terms of Use: https://www.spiedigitallibrary.org/terms-of-use

The diagram visualizes interactions between Operators, CCS and NI-IWS over time in case of one Session consisting of only one data run. Upon opening the Session, the NI-IWS increments the RunId, creates the files that will host the forthcoming HKTM/TC-E packets forwarded by the CCS, sends a forwarding request to the CCS, and starts the HKTM/TC-E acquisition. In parallel, the NI-IWS asks the CCS for new Science TM files and retrieves them when available.

4.3 Composition viewpoint

Figure 9 depicts how the NI-IWS design is structured into constituent parts and establishes the roles and functionalities assigned to those parts. It refers to the EGSE case, which is comprehensive also of the Ground Segment case.

The *Controller* implements the NI-IWS state machine, provides the monitor and control GUI to the Operator, and the commanding and HKTM/TC-E data interface to the CCS. In Running state, it processes the TC-E packets to record and monitor the TC History. It also coordinates two parallel pipelines: one for the archiving and processing of the Science TM files, and one for the HKTM packets.

As soon as a new ScienceTM file is made available by the CCS, the ScienceTM pipeline runs the *ScienceTM Archiver* to retrieve, decompress and archive it in raw format. Then, the raw file is submitted to the *ScienceTM FITS Converters* to reconstruct the exposure data and archive them in FITS format. Each converter is devoted to a specific NISP operating mode. All converters are run in parallel to be able to process a ScienceTM file generated under different operating mode. In off-line mode Converters can be used to re-process the Science TM files.

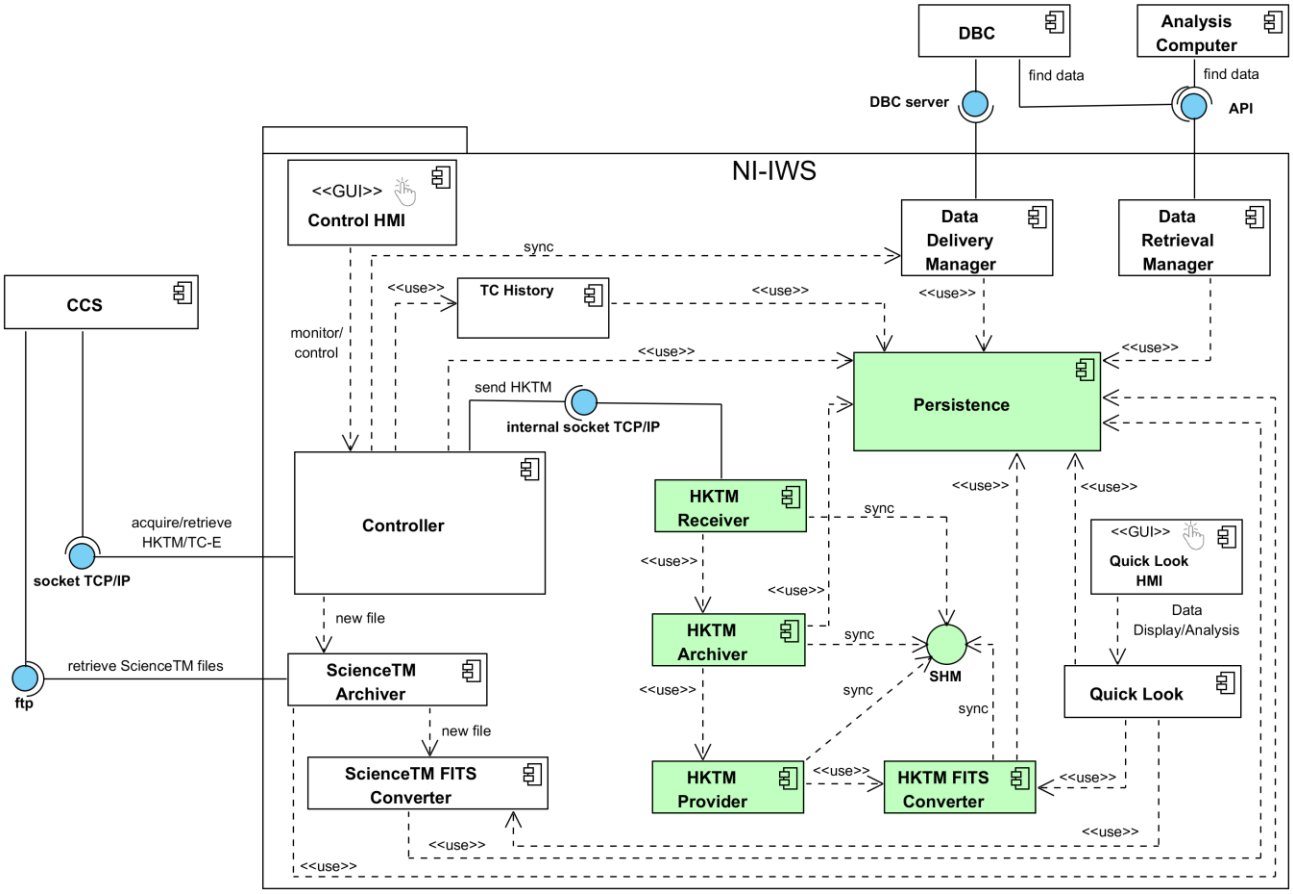

Figure 9. Component Diagram of the NI-IWS in the EGSE context.

The HKTM pipeline is based on the architecture of the mentioned CIWS-FW. The green boxes in Figure 9 identify the, modules and mechanisms that are re-used and customized for the NI-IWS. This pipeline is started-up when a new Session is opened. The Controller establishes an internal socket TCP/IP connection with the *HKTM Receiver*, and sends to it all the TM Source packets contained in the HKTM packets received from CCS. Through a Linux message queue,

Downloaded From: https://www.spiedigitallibrary.org/conference-proceedings-of-spie on 01 Jun 2020
Terms of Use: https://www.spiedigitallibrary.org/terms-of-use

each packet is forwarded to the *HKTM Archiver* that stores it into the current HKTM raw file. A synchronization mechanisms, based on Linux signals, allows the *HKTM Provider* to retrieve in near real time each packet from the raw file and write it into a bi-dimensional circular buffer, implemented through the shared memory Inter Process Communication (IPC). In this buffer, the packets are sorted by APID in order to disentangle those related to NISP from those related to VGS-TS SCOE (at LAM). Each APID is processed by a specific *HKTM FITS Converter* which reads the packet stream from the shared memory and generates the corresponding FITS files. The Provider is also able to handle the off-line re-processing of the HKTM raw file.

The *Quick Look* component is controlled by its own GUI which allows the operator to join an on-line data taking Session or to access off-line data from previous Sessions. The operator can select and display the exposure data and the relevant HK and metadata, and perform on them basic analysis. The *Data Delivery Manager*, acting as an ftp client, transfers to the DBC each archived file when available. The *Data Retrieval Manager* provides ftp access to the archive data on-request.

The *Persistence* component, relying on the MySQL database management system, implements and manages the data model of the entities that define the NI-IWS software configuration and behaviour. It will be extended in order to implement the specific NISP data model presented in the next section.

4.4 Data View

The NI-IWS tracks all the relevant data generated during the NISP AIV/AIT activities, at both EGSE level and Ground Segment level, through a database which implements the E-R Model sketched in Figure 10. Each identified entity is stored in a database table, depicted as a rectangular box with the name of the entity contained within it. The diagram depicts as an oval the main individual fields (attributes) containing the information about each entity. A suitable Application Programming Interface (API) allows the various NI-IWS components to interface the Persistence component in order to perform insert/delete/select queries to the database, as required for data archiving and retrieval operations.

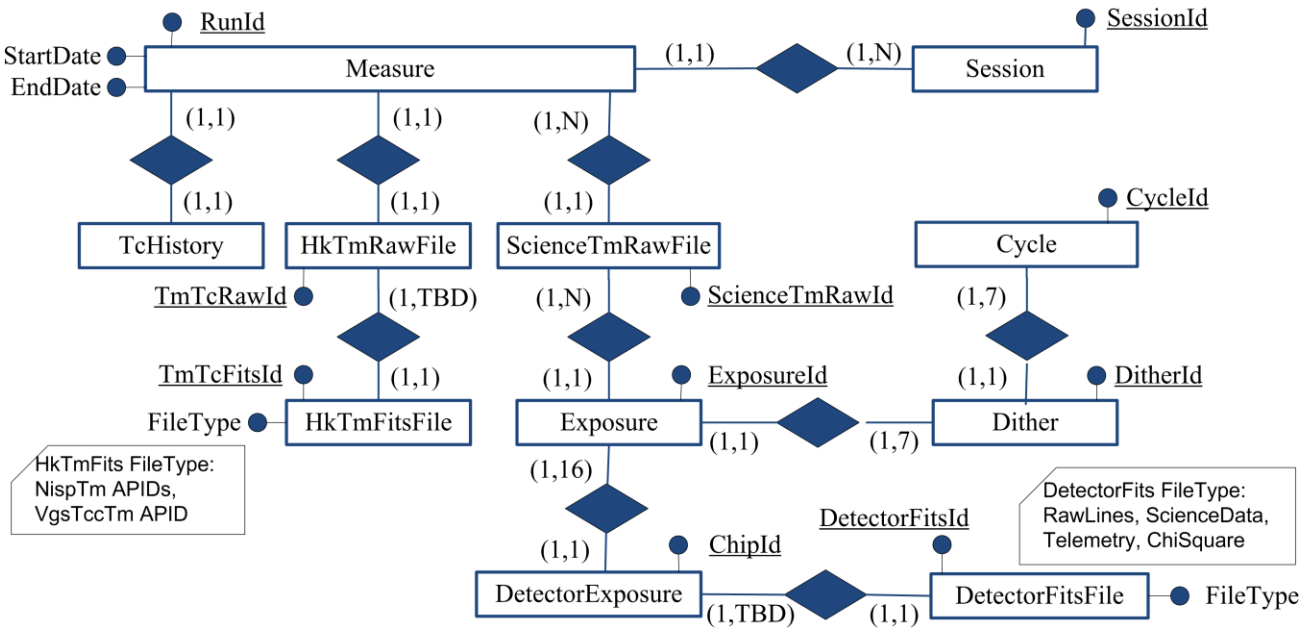

Figure 10. Entity Relationship (E-R) diagram of the NISP data model implemented by the NI-IWS Persistence component.

During data taking, the components of the two pipelines track any new instance of an entity by adding a row in the associated tables The Controller updates the *Session* table when a new Session is opened. The HKTM Receiver adds a new entry in the *Measure* table each time the RunId is incremented. The *TcHistory* table is devoted to keep track of the TC History metadata and the related TC-E packets. The HKTM Archiver saves in the *HKTmRawFile* table all information related to each new file it creates to host the forthcoming HKTM packets in raw format. A similar update is performed on the *HKTmFitsFile* table by the HKTM FITS Converters to track the files they create to store in FITS

Downloaded From: https://www.spiedigitallibrary.org/conference-proceedings-of-spie on 01 Jun 2020
Terms of Use: https://www.spiedigitallibrary.org/terms-of-use

format the HKTM packets. It is currently envisaged one file for each HKTM APID. Their total number is currently undefined, pending the APIDs definition and assignment.

In a similar way, on the Science TM pipeline the ScienceTM Archiver updates the *ScienceTmRawFile* table for each ScienceTM file retrieved from CCS/MOC. The ScienceTM FITS Converters insert a new entry in the *DetectorExposure* table for each reconstructed detector exposure dataset. Each converter extracts the metadata from the headers and the data from the data field, and stores them in FITS format. The actual architecture of these files (number, extensions, header keywords, …) is under definition. The file information are tracked by each Converter into *DetectorFitsFile* table. The relevant metadata are inserted in the *DetectorExposure*, *Exposure*, *Dither*, and *Cycle* database tables.

The database shall be exploited by the Data Delivery Manager and by the Data Retrieval Manager to manage and track the delivery operations and status of each file to be provided to the DBC and to the Analysis Computer.

CONCLUSIONS

We presented the current design of the NISP Instrument Workstation. It takes into account the capabilities required in the EGSE context, which cover also those required in the Ground Segment context. Although at the time of writing the operation modalities and the communication protocols in the Ground Segment have not been frozen yet, the proposed design should allow a smooth transition from the EGSE level to the Ground Segment level.

ACKNOWLEDGMENTS

This work and the INAF participation in the Euclid project are funded by INAF and by ASI (Italian Space Agency) through the contract number I/023/12/1 (addendum to contract n. I/023/12/0).

REFERENCES

[1] Laureijs, R.J., et al., "Euclid: ESA mission to map the geometry of the dark universe", Proc. SPIE 8442, (2012)
[2] Maciaszek, T., et al., “Euclid Near Infrared Spectro Photometer (NISP) instrument concept and first test results obtained for different breadboards models at the end of phase C”, this conference
[3] Bonoli, C., et al., "On-board data processing for the Near Infrared Spectrograph and Photometer instrument (NISP) of the EUCLID mission”, this conference
[4] Franceschi, E., et al., “EGSE customization for the Euclid NISP Instrument AIV/AIT activities”, this conference
[5] Costille, A., et al., “How to test NISP instrument for EUCLID mission in laboratory”, this conference
[6] Conforti, V., et al., “CIWS-FW: A Customizable Instrument Workstation Software Framework for Instrument-independent Data Handling”, Astronomical Data Analysis Software and Systems XXIII, ASP Conference Series, Vol. 485, 265, 2014

Downloaded From: https://www.spiedigitallibrary.org/conference-proceedings-of-spie on 01 Jun 2020
Terms of Use: https://www.spiedigitallibrary.org/terms-of-use