Dimensioning the MAORY Real Time Computer

Laura Schreiber[a], Emiliano Diolaiti[a], Carmelo Arcidiacono[a], Andrea Baruffolo[b], Giovanni Bregoli[a], Enrico Cascone[c], Giuseppe Cosentino[d], Simone Esposito[e], Corrado Felini[c], Italo Foppiani[a], Paolo Spanò[e], Paolo Ciliegi[a], Philippe Feautrier[f], and Paolo Torroni[g]

[a]INAF - Osservatorio Astronomico di Bologna, Via Ranzani 1, 40127 Bologna, Italy
[b]INAF - Osservatorio Astronomico di Padova, Vicolo Osservatorio 5, 35122 Padova, Italy
[c]INAF - Osservatorio Astronomico di Capodimonte, Salita Moiariello 16, 80131, Napoli, Italy
[d]Alma Mater Studiorum, Università di Bologna, Dipartimento di Fisica e Astronomia (DIFA),Viale Berti Pichat 6/2, 40127 Bologna, Italy
[e]INAF - Osservatorio Astrofisico di Arcetri, Largo Enrico Fermi 5, 50125 Firenze, Italy
[f]Université Joseph Fourier-Grenoble 1/CNRS-INSU, Institut de Planétologie et dAstrophysique de Grenoble (IPAG) UMR 5274, 38041 Grenoble, France
[g]Alma Mater Studiorum, Università di Bologna, Dipartimento di Informatica - Scienza e Ingegneria (DISI), Viale Risorgimento 2, 40136 Bologna, Italy

ABSTRACT

The MAORY system is the Multi-Adaptive Optics module for the European Extremely Large Telescope first light. MAORY should provide high and homogeneous image quality over the MICADO Field of View (about 1 arcmin diameter) and still an acceptable correction up to the 3 arcmin technical Field of View. The baseline of MAORY is therefore to rely upon the use of multiple Laser Guide Stars (6), multiple Natural Guide Stars (3) and multiple Deformable Mirrors correction. The Real-Time Computer is a key sub-system of MAORY. It must collect the measurements from various sensing devices and drive thousands of actuators. Many correction loops are foreseen with different update rates. The main requirements concerning the system dimensioning and real-time performance depend on the sensors and on the actuators interface and on the Real-Time Data Processing. In this paper we give a preliminary description of the MAORY Real-Time Control system functional requirements derived from the system baseline at the beginning of the instrument Phase B.

Keywords: Multi-Conjugate Adaptive Optics, European Extremely Large Telescope, MAORY, Real Time Computer, Control

1. INTRODUCTION

MAORY[1] is a post-focal adaptive optics module for the European Extremely Large Telescope (E-ELT)[2] first light. MAORY has been approved for construction[3] and the phase B has started on February 2016. It offers two adaptive optics modes to support the MICADO near-infrared camera:[4] Multi-Conjugate Adaptive Optics (MCAO) and Single-Conjugate Adaptive Optics (SCAO).[5] In the MCAO mode, MAORY uses the adaptive mirror M4 and tip-tilt mirror M5 in the telescope and up to two post-focal adaptive mirrors (DM1 and DM2) to achieve high performance with excellent uniformity of the point spread function (PSF) across the scientific Field of View (FoV); in order to ensure high sky coverage, wavefront sensing is based on a constellation of up to six Laser Guide Stars (LGS) projected from the telescope side in a constellation of 2 arcmin angular diameter and three Natural Guide Stars (NGS) positioned over a 3 arcmin technical FoV.[6] The former are used for high-order wavefront sensing; the latter are necessary for low-order wavefront sensing to measure the modes which cannot be accurately sensed by the LGSs. In the SCAO mode, MAORY uses only the telescopes M4 and M5 and a single NGS SCAO wavefront sensor to achieve excellent performance on a narrow FoV around the NGS itself. The MAORY SCAO mode development is made jointly by the MAORY and MICADO consortia. In both modes

Further author information: (Send correspondence to Laura Schreiber)
Laura Schreiber: E-mail: laura.schreiber@oabo.inaf.it, Telephone: +39 051 20 95704

wavefront sensing is performed in closed-loop with optical feedback from the sensors to the deformable mirrors. A Full Sky mode is also under investigation. We report in this paper the very preliminary concept, without entering in details. In this mode, MAORY uses M4, M5 and the post-focal DMs, relying only on LGS wavefront sensing. Low order wavefront sensing could be operated by the adaptive telescope WFSs, that count on a very large technical FoV (10 arcmin). This mode might not provide a diffraction limited PSF, but instead seeing enhanced images across the full sky.
The E-ELT first light instruments RTC is developed in close collaboration with ESO in order to ensure a common approach. ESO delivers Common Specifications (architecture, interfaces, technology standards, and verification requirements) for Real-Time Computer (RTC) Tools and the Consortia are responsible for design adaptation, procurement, testing, transport, and commissioning. This paper contains an overview of the current MAORY Real-Time Control strategy and its possible impact on the RTC Design. All the numbers reported in this paper are under investigation and have to be considered as TBC (to be confirmed) in the framework of the instrument phase B, as well as the overall control strategy and the tomographic reconstruction algorithm.

2. MAORY CONTROL OVERVIEW

The scope of this Section is to give an overview of the Real-Time Control modes that are under investigation in the framework of the MAORY phase B. To each of the modes, a calibration mode, involving the same sensors and actuators, is associated.

2.1 MCAO mode

The instrument main sensors and actuators in the baseline design and their inter-relations in MCAO mode are shown in the block diagram depicted in Fig. 1.

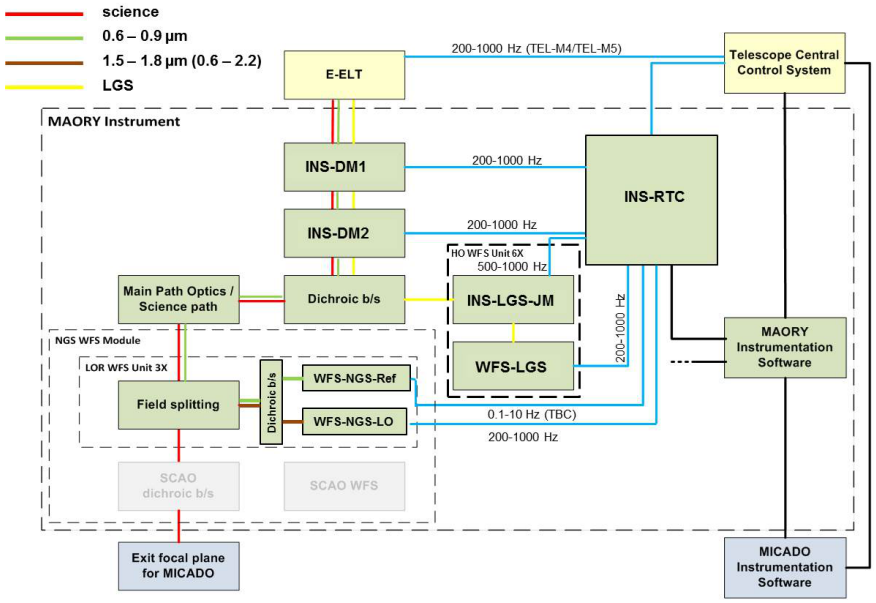

Figure 1. MCAO functional block diagram. Red lines: science light path. Yellow lines: LGS light path. Green lines: NGS visible light path. Brown lines: NGS infrared light path. Blue lines: real-time signals. Black lines: non real-time signals. Blocks in light grey are not used in MCAO mode. Possible frequency ranges are reported along the blue lines.

The light from the adaptive telescope (light yellow box on the top of Fig. 1) enters MAORY through the Main Path Optics (Common path). Upon wavefront compensation by the Post-focal Deformable Mirror(s) (which complement the telescope's M4/M5), indicated in the figure as INS-DM1/DM2, the light is split by a Dichroic beam-splitter, which is still part of the Main Path Optics. The light of wavelength shorter than about 600 nm is propagated from the Dichroic beam-splitter through the LGS Path Optics and then to the LGS Wavefront Sensor

sub-system (this sub-system is in use only in the MCAO mode, although it could be used for optical metrology of the Post-focal DMs also in the SCAO mode, see Section 2.2). For each LGS WFS channel, a fast Jitter Mirror (INS-LGS-JM) compensates for the fast tip-tilt due to the Laser jitter. This jitter mirror is also able to introduce a known periodic tilt signal on both axes to produce a known sub-pixel shift in the LGS image. This signal is required to support centroid gain calibration procedures which should to be performed during operations to mitigate WFS non-linearities and other effects that can arise when working in under-sampled conditions.
The light of wavelength longer than about 600 nm is propagated from the Dichroic beam-splitter through the last segment of the Main Path Optics (Science path) to the Exit Port. At the Exit Port the MAORY exit focal plane is made available to MICADO. The light of the required NGSs is picked off by the Wavefront Sensor Units (LOR WFSs) in the NGS WFS Module and it is divided in wavelength by a Dichroic beam-splitter. The infrared light (H band) is used to measure fast low-order aberrations (WFS-NGS-LO) which cannot be measured reliably by the LGS (such as tip-tilt,[7] focus[8] and astigmatism); the visible light is used to measure low/medium order slow wavefront aberrations modes (by the means of the so called Reference WFS, i.e. WFS-NGS-Ref in the figure) which could be affected by instrumental effects of the LGS WFS due to the sodium layer variability combined with LGS image truncation due to perspective elongation effect.[9] The sky coverage is ensured by taking advantage from the adaptive optics correction in the infrared, that squeezes the PSF of the reference stars on the fast WFS-NGS-LO detectors. On the other hand, the visible channel is characterized by a longer integration time (seconds). The dual-channel design[10] allows the efficient exploitation of the few natural stars typically available in the FoV, while providing a way to monitor the potential anisoplanatism due to differential sodium effects among the LGSs.[11] The NGS WFS architecture based on the light splitting in wavelength is still under investigation. The wavefront measurements performed by the LGS and LOR WFSs in the MCAO mode are collected by the MAORY RTC, which drives in closed loop the MAORY Post-focal DMs and, passing through the Telescope Central Control System, the actuators in the telescope, including the adaptive quaternary mirror M4, the tip-tilt mirror M5 and the Laser Lauching Facility. All instrument operations are controlled by the MAORY Instrumentation Software, which also provides interfaces to the Telescope Central Control System and to the MICADO (or other) client instrument Instrumentation Software.

2.1.1 Control Loops

The preliminary conceptual architecture of MAORY is represented in Fig. 2. It is composed of WFS Processing Units that receive the WFS pixels, take care of image reconstruction, pixels pre-processing, centroid calculation and gain calibration (to compensate for non linearity effects), and finally provide slopes measurements. Each WFS is associated to a single Unit to optimize parallelization. In the figure, all the WFS Processing Units relative to a certain loop (LGS, LO NGS or Reference NGS) are grouped in a single box for simplicity. A global tomographic reconstructor receives the slopes from the WFS Processing Units and computes the high order (HO) and low order (LO) correction to be applied to the various actuators, some of them belonging to MAORY (post-focal DMs), others to the Telescope (M4/M5). The HO loop is first closed on the LGSs and then the NGSs for the LO loop are acquired and the LO loop is closed. As baseline, the control is performed by a Minimum Mean Square Error approach based on the generalized inverse of the global interaction matrix.

- **High orders LGS control Loop (Fig. 3)**

  The HO LGS control loop is the loop that more impacts on the RTC complexity. Six Shack-Hartmann WFS with 80×80 sub-apertures will work at a frame rate between 200 - 1000 Hz. The slopes vectors computed by the LGS WFS Processing Units are first subtracted for the slope offsets computed by the Reference NGS control loop (see below) and then sent to the control module. As baseline, the control is performed by a Minimum Mean Square Error approach based on the generalized inverse of the global interaction matrix. The LGS WFS do not measure the LO order modes (tip-tilt, focus and astigmatisms), that are measured instead by the NGS WFSs. The reconstructor distributes the correction within the DMs conjugated to the different altitudes and sends the measurements relative to the Tip-Tilt to the Telescope Central Control System, that takes care of allocate the commands within the actuators (M4 and M5). The DMs saturation management is required in order to maintain the capability of the adaptive mirrors to correct the low spatial frequency aberrations even in case of bad seeing. In addition the DMs should

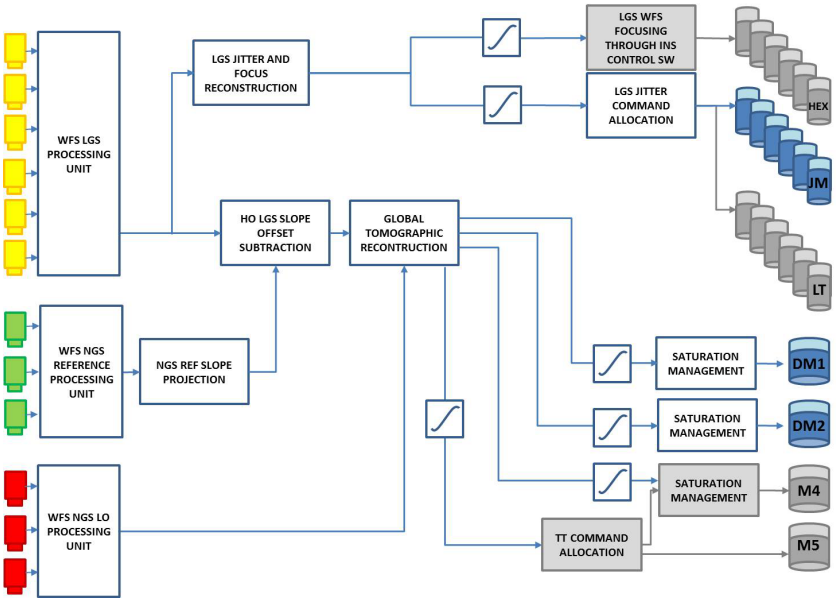

Figure 2. Conceptual overall control loop diagram for MCAO mode configuration. The actuators depicted in grey belongs to the Telescope Control System. Functional blocks depicted in grey may belongs to the Telescope Control System.

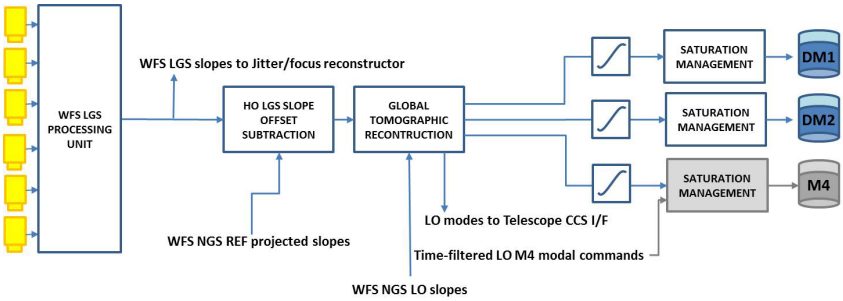

Figure 3. Conceptual control HO loop diagram.

implements an embedded safety mechanism to ultimately avoid actuator saturation and ensure the safety of the units.

- **LGS Jitter control Loop (Fig. 4)** In order to ensure a good linearity of the LGS WFS it is necessary to correct the global jitter of the laser sources on each LGS WFS channel. This jitter may be due to the Laser launching facility differential windshake, residual turbulent jitter, and telescope residual windshake. Consequently a local jitter mirror, controlled thanks to the LGS WFS tip-tilt measurements through a fast control loop, will be placed inside each LGS WFS arm. This jitter mirror should be also able to introduce a known periodic tilt signal on both axes to produce a known sub-pixel shift in the LGS image to support centroid gain calibration procedures to mitigate WFS non-linearities that can arise when working in under-sampled conditions. The synchronization between the WFS cameras and the tip-tilt jitter mirrors signal may be operated by the LGS WFS Processing Units themselves. To reduce the requirement on these jitter mirrors course, low frequency downloads towards the LGS launching facility is foreseen. Also a Focus control is necessary to correct for the sodium layer drift in altitude that could lead to a variation of focus of the Laser source on the WFS. This drift may be due either by the evolution of elevation of the telescope or by the natural drift of the sodium layer itself. In the second case, direct measurements of the focus on the LGS WFS may be used. Focus measurements are sent to the Instrument Control Software, which takes care of the single LGS WFS Units focusing through hexapodes (as foreseen in the baseline design). This

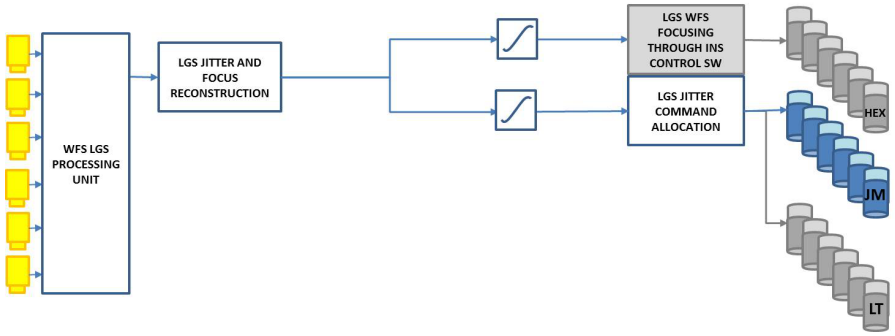

Figure 4. Conceptual control Jitter and differential Focus loop diagram.

loop will be of negligible complexity.

- **Low orders NGS control Loop (Fig. 5)** The LO control loop is devoted to the measurement of the tip-tilt, focus and, possibly, astigmatisms through infrared (H band) NGS WFSs. The LO WFS, as a baseline, is a Shack-Hartmann WFS. The minimum theoretical number of sub-apertures to measure tip-tilt and focus is 2×2. If the sodium layer properties were uniform across the field of view, then just one WFS out of three should measure focus and possibly astigmatism, but this is probably not the case because of the actual sodium layer properties.[11] The LO WFS works in the infrared in order to benefit from the spot shrinking ensured by the high-order MCAO correction over the NGS search field: light concentration in the star diffraction limited core improves centroid sensitivity allowing the use of very faint stars and also allows to reject the infrared background by spot windowing. The frame rate of the LO WFS is 100-1000 Hz, the actual value depending on the NGSs brightness. Since telescope windshake is a large and fast contributor to tip-tilt, Kalman filtering is foreseen to take into account the statistical properties of this phenomenon. The tip-tilt correction is operated by the telescope M4 (running up to 1 kHz) and M5 (tens of Hz), while focus and astigmatism, beeing anisoplanic modes, are allocated among M4 and the post-focal DMs.

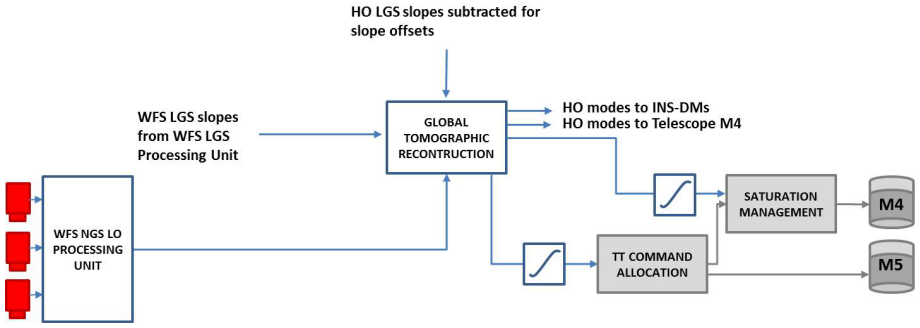

Figure 5. Conceptual control LO loop diagram.

- **Reference NGS control Loop (Fig. 6)** The Reference WFS has the purpose to monitor the spurious LGS aberrations due to the Sodium layer temporal variation, coupled with LGS image truncation, as well as to monitor the quasi-static aberrations of the optical system. About the optical aberrations also the long term average of LGS WFS slope data may be used as an additional source of information. The Reference WFS should work at a low frequency (in the range of 0.1-10 Hz) in order to properly monitor the Sodium layer variations, possibly without affecting the sky coverage. As baseline, 3 Reference WFS are foreseen to be able to reconstruct the medium/low order aberrations across the FoV of MAORY. From a preliminary study,[9] 10 sub-apertures on the pupil diameter should be sufficient to sample the modes that arise from Sodium variation. The slopes from the Reference WFS NGS Processing Units are used to retrieve the

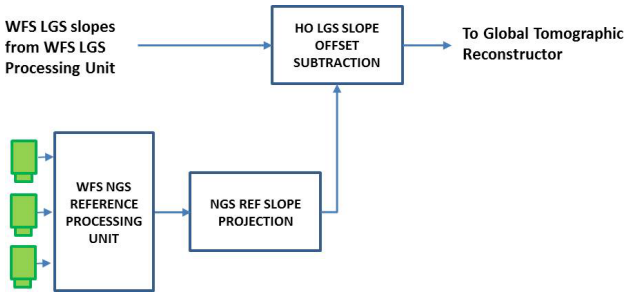

Figure 6. Conceptual control loop diagram related to the Reference WFS.

low/medium order modes ($\approx$ 50 - 80 modes) at the DMs altitudes and then to compute the slopes in the LGS slopes space. These slopes are used as a slope offsets for the LGS WFSs.

2.2 SCAO mode

MAORY has to provide in its baseline a SCAO mode for narrow field science and this mode will be jointly developed by the MAORY and the MICADO consortia together. The MICADO-MAORY SCAO RTC activities are reported in Ref. 5 and 12. We report in the following a block diagram (Fig. 7) for completeness, followed by a short description. Without a doubt, the RTC overall complexity is driven by the MCAO mode, that counts a much larger number of sensors and actuators, strongly impacting the required power computation and the data storage needs. For this reason, the following considerations will refer only to the MCAO mode.

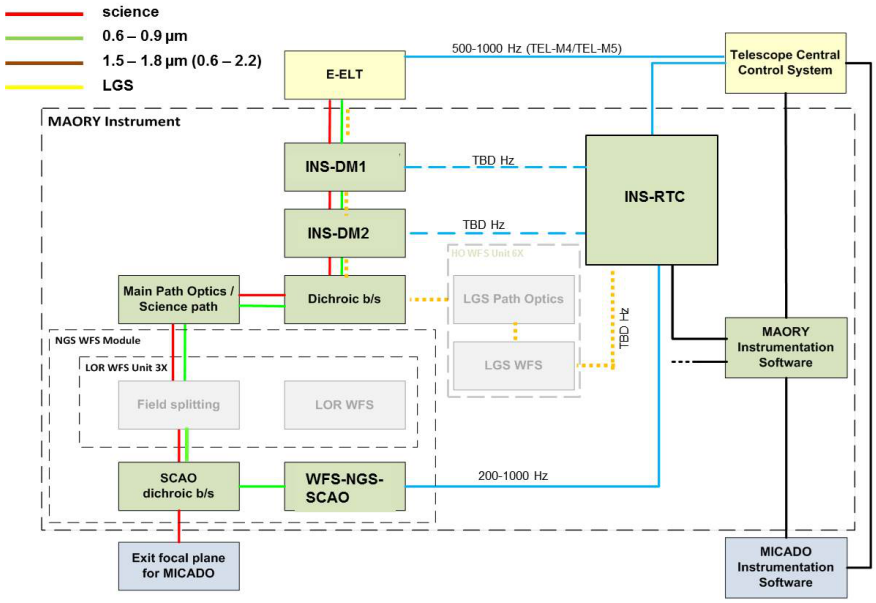

Figure 7. SCAO functional block diagram. Red and green lines: light path. Blue lines: real-time signals. Black lines: non real-time signals.Block in light grey are not used in SCAO mode. The dashed blue line corresponds to the possible post-focal DMs control in the SCAO mode.

LGS are not used in SCAO mode. The light path is essentially the same as in the MCAO mode, with the exception of the Exit Port. Here the light of a NGS nearby the scientific target of interest is selected in wavelength by a Dichroic beam-splitter close to the exit focal plane. This Dichroic beam-splitter is deployable: it is inserted in the optical beam only in SCAO mode and it transmits the science wavelength to MICADO. Signal from the SCAO WFS in the NGS WFS Module are sent to the RTC, which sends signals to the Telescope Central

Control System that drives the actuators in the telescope. In SCAO mode, the post-focal deformable mirrors (INS-DM1 and INS-DM2) are kept at their reference shape by internal metrology. In case internal metrology is not sufficient to ensure the required flatness, the DMs shape control may be performed by the SCAO WFS itself or by the LGS WFS looking at artificial sources at the MAORY entrance focal plane (dashed yellow lines in Fig. 7). Whether this requires active control is under investigation.

2.3 Full-sky mode

As anticipated in the introduction, this mode is under investigation. The conceptual block diagram is reported in Fig. 8.

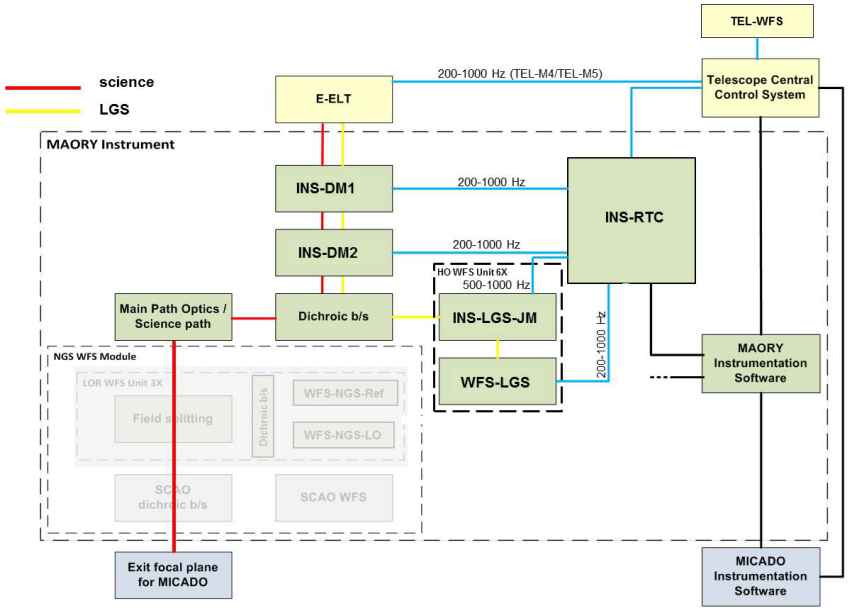

Figure 8. Full-sky mode functional block diagram. Red line: science light path. Blue lines: real-time signals. Black lines: non real-time signals. Block in light grey are not used in this mode.

In this mode, only LGSs are used for wavefront sensing inside MAORY. After the Dichroic beam-splitter, that pick off the laser light for the LGS WFS units, the light is propagated through the Science path to the MAORY exit focal plane. In this configuration, no information about Low Order modes (tip-tilt, focus, astigmatisms and slowly varying medium/low order modes) is available from internal WFSs, allowing to close only the HO loop. The LO modes information could be retrieved by the telescope WFSs used for field stabilization and active optics control. These WFSs take advange from a very large patrol field (about 10 arcmin), ensuring an almost full sky coverage. Since these WFSs are located upstream MAORY, a residual differential tip-tilt will affect the final performance. Moreover, information about the medium/low order modes injected in the loop by the LGS image truncation effect can only be recovered concerning M4, but not for the post-focal DMs in MAORY. The PSF on the science detector might not reach the diffraction limit, but the resulting FWHM should be smaller than the seeing. The performance of MAORY when operating in this configuration are still under investigation and they will drive the choice to implement it or not.

3. RTC PRELIMINARY REQUIREMENTS

As already mentioned, MAORY wavefront sensing relies on six LGS WFS, three LO WFS and three Reference WFS and two post-focal DMs, together with telescope M4 and M5, are responsible for the wavefront correction. Table 1 summarizes the MAORY system baseline driving the RTC specifications. Many trade-off are still under investigation, but for simplicity we report only a small set of possible parameters. For some of the parameters,

Table 1. MAORY system baseline. Goal values in brackets

Sensors	LGS WFS	Quantity	6
		Type	Shack-Hartmann
		Wavelength	589 nm
		Detector size	880×840 (1760×1680)
		Sub-apertures	80×80
		Sub-aperture size	10×10 (20×20)
		Maximum frame rate	1 kHz
	Low Order WFS	Quantity	3
		Type	Shack-Hartmann
		Wavelength	1.5 μm - 1.8 μm
		Detector size	320×256 (500×500)
		Sub-apertures	2×2
		Sub-aperture size	125×125 (250×250)
		Maximum frame rate	1 kHz
	Reference WFS	Quantity	3
		Type	Shack-Hartmann
		Wavelength	0.6 μm - 0.8 μm
		Detector size	240×240
		Sub-apertures	10×10
		Sub-aperture size	24×24
		Maximum frame rate	10 Hz
Actuators	M4 (Telescope)	Quantity	1
		Type	Shape Control
		Degrees of Freedom	5316
		Maximum update rate	1 kHz
	M5 (Telescope)	Quantity	1
		Type	Tip-Tilt
		Degrees of Freedom	2
		Maximum update rate	1 kHz
	Post-Focal DM	Quantity	2
		Type	Shape Control
		Degrees of Freedom	≈ 500
		Maximum update rate	1 kHz
	LGS channel Jitter Mirror	Quantity	6
		Type	Tip-Tilt
		Degrees of Freedom	2
		Maximum update rate	1 kHz

like the detector size, the baseline and the goal parameters are reported. In particular, the LGS WFS sub-aperture FoV is a key parameter that could have an impact on the performance. A larger number of pixels would allow a FoV properly dimensioned to avoid spot truncation at the maximum spot elongation. As previously discussed, the truncation of elongated spots could cause the injection of spurious low order modes in the loop, causing a performance degradation. Many back-up solutions are under study to mitigate this risk using a small detector. A smaller number of pixels is acceptable, providing that: an auxiliary loop monitors for low/medium order modes arising from spot truncation effects; the LGS image is under-sampled in order to maximize the available FoV (centroid calibration procedures are then needed). The baseline detector is the NGSD[13] 880×840, but LGS WFS will be probably designed, in terms of volumes allocation, to allow the future implementation of the 1760×1680 LGSD,[13] and the RTC shall be also dimensioned taking this future upgrade into account.

3.1 Data stream

From Table 1, the following requirements can be deduced:

Table 2. MAORY requirements on data streams. Goal values in brackets

Pixel data stream (Per LGS WFS)	7.4 Gbps (29.6 Gbps)	Det size X * Det size Y * bit per px * Fps
Pixel data stream (Per LO NGS WFS)	2.6 Gbps (8 Gbps)	Det size X * Det size Y * bit per px * Fps
Slope data stream (for all LGS WFSs)	1.9 Gbps	num of WFS subap * 2 * Fps * Nstars
Slope data stream (for all NGS WFSs)	768 Mbps	num of WFS subap * 2 * Fps * Nstars
DMs data stream	M4/M5: 170.2 Gbps Internal DMs: 16 Mbps per DM	DoF * bits per command * loop rate

The pixel data stream is the requirement for pixel data transfer over the external interface between a single WFS and its WFS Processing Unit. The image data has been considered with 10 bit precision.[13] The Reference WFS has not been reported in Table 1 because, for its small number of sub-apertures and for its long integration time, it is considered not challenging. The slope data stream is the requirement for slopes data transfer over the internal interface between the WFS Processing Units and control module within the RTC for all the reference stars. The DM data stream is the requirement for DM data transfer over the external interface between the RTC the DM electronics drive systems. 32 bit command has been considered.

3.2 Complexity and time constraints

The WFS Processing Units receive the WFS pixels, take care of image reconstruction, pixels pre-processing, centroid calculation and gain calibration (to mitigate for WFS non-linearities), and finally provide slopes measurements. For the WFS data processing complexity evaluation, we assume the Shack-Hartmann WFS with Weighted Center of Gravity (WCoG) algorithm for centroid computation. A more sophisticated algorithm, like the correlation, could of course increase the level of complexity. Likely, more than one algorithm will be available to the user. The WFS data processing complexity will be computed considering the more demanding one. The pixels pre-processing operations are done on the entire frame and consist of Dark map subtraction, flat field map multiplication and background map subtraction. As total system operation, in order to compute the slopes, 6.9 MFlop are needed (27.8 MFlop for LGSD), considering also pixels pre-processing. In this case, the computing requirements with a frame rate of 1000 fps is 6.9 MFlop/s (27.8 MFlop/s) memory bandwidth. To compute this requirements, an LGS WFS of $80 * 80 * \pi/4$ useful sub-apertures and 10×10 (20×20) pixels per sub-aperture has been considered. The requirement for the LO NGS WFS Processing Units is instead 700 KFlop/s memory bandwidth (2.5 MFlop/s considering the larger detector in Table 1).

The command computation is the most demanding operation. For the complexity computation we assume MVM-based reconstruction. The product of matrix of size $m \times n$ by a vector of size n requires $m*n$ multiplications and $m * (n-1)$ summations. The complexity expressed in FLOPS is then $m * (2 * n - 1)$. The complexity in MACS (multiply-and-add operations per second) is then $m * n$. For big matrix sizes, the complexity in GFLOPS can be approximated by $2 * m * n$. Even if not in the MAORY baseline, the Pseudo Open Loop Control (POLC) may be assumed as a conservative scenario. Trade-off studies on the control are still under investigation. MMSE and POLC[14] tomographic reconstruction requires, at a minimum, the projection from commands to pseudo open-loop slopes via the interaction matrix (i.e. product of a matrix of size $(2 * S) \times M$ by a vector of size M) followed by the projection from pseudo open-loop slopes to commands via the MMSE tomographic reconstructor (i.e. product of a matrix of size $M \times (2 * S)$ by a vector of size $2 * S$), where S is the total number of WFS sub-apertures (including all the WFS in a given loop) and M is the total number of reconstructed DoF (including all the DoF commanded by a given loop). The first operation may be started in offline time (since it only requires knowledge of the last command) whereas the second operation must be performed in online time. For the two matrix projections discussed above, the overall complexity in GFLOPS can be approximated by $2*(2*S)*M/T + 2*M*(2S)/T = 4*S*M/T$, where T is maximum time allotted for the RTC computation. T is the time available for RTC computation, that is the time elapsed between the reception of the first WFS readout data by the RTC and the moment at which the last actuator command is sent to the DM. We took as worst-case

assumption, T = 1 loop cycle. The complexity is computed as $4*6*80*80*\pi/4*2*(5316+2*500.)*1000 \cong 1.5$ TFLOPS . RTC processing is assumed to start in parallel with WFS readout and elapse 1 loop cycle.

4. FUTURE DEVELOPMENTS

The MAORY RTC design and architecture will be refined during the Phases B and C of the project, in order to asses the cost estimation for the Final Design Review, expected in August 2019. Many trade-off that could impact the RTC complexity and required computational power are currently under investigation, both at the level of the instrument architecture and control. Even if the technologies and interfaces for the RTC implementation will be decided by ESO to assure the maximum uniformity among the RTCs of all the instruments and of the telescope itself, as a working group we are analyzing the viability and prototyping a WFS Processing Unit based exclusively on Full Programmable Gate Arrays (FPGA) technology, considering their parallel processing capability.[15] This Unit will be experimentally tested exploiting the MAORY LGS WFS Prototype[16] integrated in the Optical laboratories of the Astronomical Observatory of Bologna to generate the pixel data information.

ACKNOWLEDGMENTS

This work has been partly supported by the Progetto Premiale E-ELT funded by the Italian Ministero dellIstruzione, dellUniversit e della Ricerca. Warmly thank Marcos Suarez Valles and Enrico Marchetti for complexity computation.

REFERENCES

[1] Diolaiti, E. et al., "Preparing for the phase b of the e-elt mcao module project," *Proc. SPIE* **9148**, 91450Y.

[2] Tamai, R. and Spyromilio, J., "European Extremely Large Telescope: progress report," *Proc. SPIE* **9145**, 91451E (2014).

[3] Ramsay, S. K., Casali, M. M., González, J. C., and Hubin, N., "The E-ELT instrument roadmap: a status report," *Proc. SPIE* **9147**, 91471Z (2014).

[4] Davies, R., Ageorges, N., Barl, L., Bedin, L. R., Bender, R., Bernardi, P., Chapron, F., Clenet, Y., Deep, A., Deul, E., Drost, M., Eisenhauer, F., Falomo, R., Fiorentino, G., Förster Schreiber, N. M., Gendron, E., Genzel, R., Gratadour, D., Greggio, L., Grupp, F., Held, E., Herbst, T., Hess, H.-J., Hubert, Z., Jahnke, K., Kuijken, K., Lutz, D., Magrin, D., Muschielok, B., Navarro, R., Noyola, E., Paumard, T., Piotto, G., Ragazzoni, R., Renzini, A., Rousset, G., Rix, H.-W., Saglia, R., Tacconi, L., Thiel, M., Tolstoy, E., Trippe, S., Tromp, N., Valentijn, E. A., Verdoes Kleijn, G., and Wegner, M., "MICADO: the E-ELT adaptive optics imaging camera," *Proc. SPIE* **7735**, 77352A (2010).

[5] Clénet, Y. et al., "MICADO SCAO specifications, prototyping, concepts and current preliminary design," *Proc. SPIE* **9909** (2016).

[6] Lombini, M. et al., "Optical design of the post-focal relay of MAORY," *Proc. SPIE* **9908** (2016).

[7] Rigaut, F. and Gendron, E., "Laser guide star in adaptive optics - The tilt determination problem," *A&A* **261**, 677–684 (1992).

[8] Herriot, G., Hickson, P., Ellerbroek, B., Véran, J.-P., She, C.-Y., Clare, R., and Looze, D., "Focus errors from tracking sodium layer altitude variations with laser guide star adaptive optics for the Thirty Meter Telescope," *Proc. SPIE* **6272**, 62721I (2006).

[9] Schreiber, L., Diolaiti, E., Arcidiacono, C., Pfrommer, T., Holzlöhner, R., Lombini, M., and Hickson, P., "Impact of sodium layer variations on the performance of the E-ELT MCAO module," *Proc. SPIE* **9148**, 91486Q (2014).

[10] Diolaiti, E., Schreiber, L., Foppiani, I., and Lombini, M., "Dual-channel multiple natural guide star wavefront sensor for the E-ELT multiconjugate adaptive optics module," *Proc. SPIE* **8447**, 84471K (2012).

[11] Pfrommer, T. and Hickson, P., "Mesospheric sodium structure variability on horizontal scales relevant to laser guide star asterisms," *Proc. SPIE* **8447**, 844719 (2012).

[12] Gratadour, D., "Green FLASH: energy efficient real-time control for AO," *Proc. SPIE* **9090**, 9909–183 (2016).

[13] Downing, M., " LGSD/NGSD: high QE, 3e-RoN, fast 700fps, 1760x1680 pixels, AO LGS CMOS imager for the E-ELT," *Proc. SPIE* **9916** (2016).

[14] Gilles, L., "Closed-loop stability and performance analysis of least-squares and minimum-variance control algorithms for multiconjugate adaptive optics," *Applied Optics* **44**, 993–1002 (2005).

[15] Felini, C., Schreiber, L., Cosentino, G., et al., "Possible application of FPGA to the MAORY Real Time Computer," *Mem. S.A.It.* (2016).

[16] Patti, M., Lombini, M., Schreiber, L., Bregoli, G., Arcidiacono, C., Cosentino, G., Diolaiti, E., and Foppiani, I., "Laboratory prototype for the demonstration of sodium laser guide star wavefront sensing on the E-ELT ," *Mem. S.A.It.* **86**, 441 (2015).