PROCEEDINGS OF SPIE

SPIEDigitalLibrary.org/conference-proceedings-of-spie

GIANO and HARPS-N together: towards an Earth-mass detection instrument

Tozzi, A., Oliva, E., Iuzzolino, M., Fini, L., Puglisi, A., et al.

A. Tozzi, E. Oliva, M. Iuzzolino, L. Fini, A. Puglisi, M. Sozzi, G. Falcini, L. Carbonaro, A. Ghedina, L. Mercatelli, U. Seemann, R. Claudi, "GIANO and HARPS-N together: towards an Earth-mass detection instrument," Proc. SPIE 9908, Ground-based and Airborne Instrumentation for Astronomy VI, 99086C (9 August 2016); doi: 10.1117/12.2231898

SPIE.

Event: SPIE Astronomical Telescopes + Instrumentation, 2016, Edinburgh, United Kingdom

Downloaded From: https://www.spiedigitallibrary.org/conference-proceedings-of-spie on 22 Jul 2020 Terms of Use: https://www.spiedigitallibrary.org/terms-of-use

GIANO and HARPS-N together, towards an Earth-mass detection instrument

A.Tozzi[a,*], E.Oliva[a], M.Iuzzolino[a], L.Fini[a], A.Puglisi[a], M.Sozzi[a], G.Falcini[a], L.Carbonaro[a], A.Ghedina[b], L.Mercatelli[c], U.Seemann[d] , R.Claudi[e]

[a] INAF-Osservatorio Astrofisico di Arcetri, Largo E. Fermi 5, 50125, Firenze, Italy

[b] Fundación Galileo Galilei – INAF, Rambla J. Pérez 7, 38712, Breña Baja, TF – Spain

[c] INO-CNR, largo E. Fermi 5, 50125, Firenze, Italy

[d] Georg-August-Univ Göttingen, Wilhelmsplatz 1, 37073, Göttingen, Germany

[e] INAF-Osservatorio Astronomico di Padova, Vicolo dell'Osservatorio, 5, 35141, Padova , Italy

Abstract. This article describes the works we are doing for modifying the interface between the high resolution infrared spectrograph GIANO (0.97-2.4 micron) and the TNG telescope, passing from a fiber feed configuration to the original design of a direct light-feeding from the telescope to the spectrograph. So doing the IR spectrograph, GIANO, will work in parallel to HARPS-N spectrometer (0.38-0.70 micron), the visible high resolution spectrograph, thanks to a new telescope interface based on a dichroic window that simultaneously feeds the two instrumentes: this is GIARPS (GIAno & haRPS). The scientific aims of this project are to improve the radial velocity accuracy achievable with GIANO, down to a goal of 1 m/s, the value necessary to detect Earth-mass planets on habitable orbits around late-M stars, to implement simultaneous observations with Harps-N and GIANO optimizing the study of planets around cool stars. The very broad wavelengths range is particularly important to discriminate false radial velocity signals caused by stellar activity. We therefore include several absorption cells with different mixtures of gases and a stabilized Fabry Perot cavity, necessary to have absorption lines over the 0.97–2.4 microns range covered by GIANO. The commissioning of GIARPS is scheduled by the end of 2016.

Keywords: High Resolution spectrograph, Planetary detection, IR optics, GIANO, HARPS-N.

***First Author**, E-mail: atozzi@arcetri.astro.it

1 Introduction

The aims of this new interface for GIANO and HARP-N are as follows:

1) Improve the Radial Velocity (RV) accuracy achievable with GIANO, down to a goal of 1 m/s, the value necessary to detect Earth-mass planets on habitable orbits around late-M stars [11]. The current RV-accuracy of GIANO is limited to about 10 m/s rms by the intrinsic variations of the telluric absorption features used as RV calibrators. These variations are due to bulk motions (wind) and pressure variations of the air layers along the line of sight. They cannot

Ground-based and Airborne Instrumentation for Astronomy VI, edited by Christopher J. Evans, Luc Simard, Hideki Takami
Proc. of SPIE Vol. 9908, 99086C · © 2016 SPIE · CCC code: 0277-786X/16/$18 · doi: 10.1117/12.2231898

Downloaded From: https://www.spiedigitallibrary.org/conference-proceedings-of-spie on 22 Jul 2020
Terms of Use: https://www.spiedigitallibrary.org/terms-of-use

be corrected because of the intrinsic difficulty to measure/model the 3D structure of the atmosphere during the observations and because the pressure-shift coefficients for most molecules are poorly known, if any. We therefore propose to modify the telescope interface including several absorption cells with different lengths and mixtures of gases, necessary to have absorption lines over the 0.97–2.4 microns range covered by GIANO. Indeed, absorption cells are the safest (and practically only) way to improve the RV-accuracy of a spectrometer designed and built for direct light-feeding from the telescope. A Harps-like approach using current fibers-based interface (built as a back-up solution to fulfill the constraints set by the TNG) is much more risky because the spectrometer slit and the fibers are separate elements, i.e. the very accuracy/uniformity achievable at the fiber-exit cannot be easily maintained by the optical system that re-images the warm fiber onto the cryogenic slit.

2) Implement simultaneous observations with Harps-N and GIANO, to optimize the study of planets around cool stars. The very broad wavelength range is particularly important to discriminate false RV signals caused by stellar activity. The use of a dichroic window in the new telescope interface gives us the possibility to feed simultaneously the two instruments. Moreover, the current Harps-N functionalities for target acquisition, telescope guiding, ADC compensation etc. will be preserved. Therefore the special observing procedures necessary for IR-observations with GIANO (beam-switching, separate guiding on IR image etc.) must be included in the opto-mechanical system that feeds GIANO, as described in the following.

2 GIARPS conceptual modules and description.

In Figure 1 is sketched that part of the prelist system attached directly to the elevation axis of the telescope and in Figure 2 the second part of the prelist, located into a metal structure grounded to the floor. In this second figure the red arrows indicate the devices that will be remotely controlled: with an arrow if they are movable axis or with a dot if they are not movable components but they need to be controlled by software (CCDs, lamps, LED, …).

The main part of these components are commercial, drivers and controllers will be located into three small 19 in rackmounts placed in the ex SARG mechanical structure, just below the optical bench of GIARPS itself. The calibration unit will be placed in that location, too.

Downloaded From: https://www.spiedigitallibrary.org/conference-proceedings-of-spie on 22 Jul 2020
Terms of Use: https://www.spiedigitallibrary.org/terms-of-use

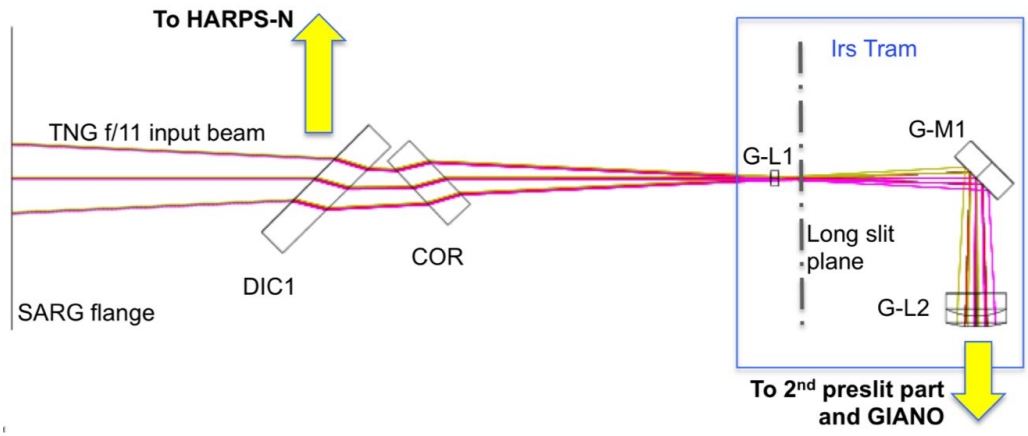

Figure 1 Functional scheme of the GIARPS preslit system in the TNG attached part. DIC1 is the dichroic mirror, COR is the corrector. GL1 and GL2 are the two first lenses of the GIARPS preslit.

In the following the description of the prelist is divided into modules.

1. *HARPS Dichroic module (DIC+COR)*

The first element, visible in Figure 1, is the dichroic that reflects the visible light toward Harps-N, and transmits the IR light to GIANO. In order to maximize the throughput for both instruments three observing modes are foreseen: Harps-N only maintaining the actual optical configuration with the already existing mirror, Giano only removing the Dichroic and the corrector, both Giano and Harps-N splitting the light with the dichroic.

The selection of the observing mode will be performed with the movement of the Entrance Slider of LRS, where the mirror of Harps-N, that will not removed, is now hosted. The calibration mirror of LRS will thus be substituted with a new optical mount for the dichroic module.

This mount also includes the IR optics necessary to correct for the aberrations introduced by the dichroic in the transmitted IR beam: this is the corrector (COR). Noticeably, the mechanism to insert/remove the dichroic module is independent from the rest of the Giano interfaces: in other words, the Giano interface can work with or without the dichroic. The option of having both optical configurations implies a focus shift of severall mm between the two observing mode: this shift can easily be compensated with the movement of the secondary mirror of the TNG (M2).

Downloaded From: https://www.spiedigitallibrary.org/conference-proceedings-of-spie on 22 Jul 2020
Terms of Use: https://www.spiedigitallibrary.org/terms-of-use

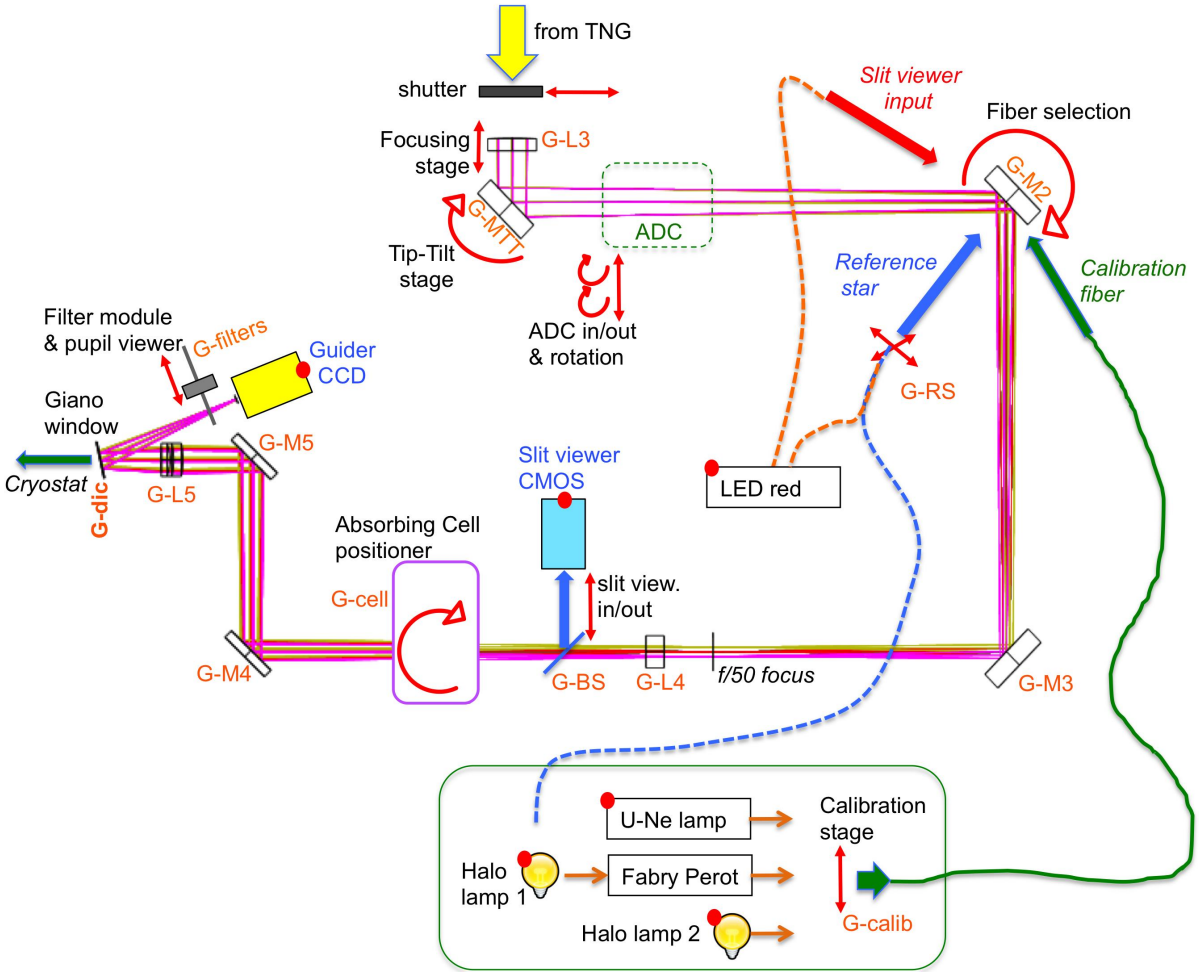

Figure 2 Functional scheme of the GIARPS preslit system.

Arrows indicate remote controlled movable axis, while dots indicate devices that will be controlled by software.

Absorbing cell is not in scale (approximately length is one meter) .

In order to allow simultaneous observations with Giano and Harps-N the optical system is designed to be at the nominal focus (the same focus of Harps-N) when the dichroic module is inserted into the beam. The focus shift will be compensated with M2 when observing Giano only. When the to instruments will work together, G-L3 will correct ta residual differential focus if necessary. GIARPS board is visible in Figure 10.

The optical elements of the first module (shown in Figure 1) are:

- DIC1. A dichroic feeding Harps-N in reflection. This element is wedged to deviate ghost-reflections from the second surface outside of the field of view of the guiding

Downloaded From: https://www.spiedigitallibrary.org/conference-proceedings-of-spie on 22 Jul 2020
Terms of Use: https://www.spiedigitallibrary.org/terms-of-use

camera of Harps-N. The field of view in reflection (to Harps-N fibres) is Ø 2 arc-min, while the field of view in transmission (to GIANO) is Ø 10 arc-sec. Infrasil made.

- COR. A wedged corrector (same angle of DIC1) to compensate the aberrations introduced by the dichroic.

2. Re-imaging module (GL1+GL2)

This sub-system includes the optical elements necessary to create a downlink toward the second part of the prelist, located below the telescope Nasmyth B de-rotator, in the volume previously allocated to SARG. This module will be mounted on the DOLORES-TRAM, i.e. it will substitute one of the slit-masks of DOLORES.

The light from GL2 exits vertically toward the SARG structure at approximately 160 mm from the LRS-TRAM slide reference plane. This optical downlink will be realized on air, using no support structure because of the rotation of the mechanical structure.

The optical elements of this module (shown in Figure 1) are:

- G-L1. A singlet lens that works as field lens, placed with its first surface on the nominal focus of f/11 TNG beam.
- G-M1. A mirror that deviates the light.
- G-L2. A doublet lens that generated the optical downlink toward the optics located into the ex SARG frame.

3. Focusing module (GL3)

This module is necessary to correct and optimize the focusing of the stellar image onto the GIANO slit. It is fundamental when Harps-N and GIANO are simultaneously used, because the focusing of the telescope is in this case governed by Harps-N, i.e. any focusing correction for GIANO must be performed within the GIANO-telescope interface. It is also useful to correct the focus when the module, proposed but not present at the moment, is inserted in the beam.

The optical elements of the module (shown in Figure 2) are:

- G-L3 A singlet lens that, with G-L2 and G-L1, puts the image of the primary TNG mirror on the following flat mirror G-MTT and generates an f/50 beam. This lens will be mounted on a linear focusing remote controlled stage.

Downloaded From: https://www.spiedigitallibrary.org/conference-proceedings-of-spie on 22 Jul 2020
Terms of Use: https://www.spiedigitallibrary.org/terms-of-use

4. Tip-tilt module (G-MTT)

This module is used to perform beam-switching and fine-guiding without moving the telescope. It is fundamental during simultaneous with Harps-N, but is also useful for fast-guiding when observing with GIANO alone. It consists of a steering mirror positioned at the image of the telescope pupil. G-MTT that is a flat mirror and operates as steering mirror. This mirror will be mounted on a piezo Tip Tilt platform, (model S-330 by PI), that can operate up to 1.4 KHz with +/- 5 mrad optics angle with a resolution of +/- 20 nrad. A modulation signal, approximately at 30-50 Hz, will be used as fast homogenizing illumination of the Giano's slit, in a direction perpendicular to the slit axis: this movement will achieve a flat-top PSF in the dispersion direction, fundamental to improve the radial velocity accuracy.

5. ADC module

The atmospheric dispersion compensator (see Figure 3) is useful for observation at low altitudes, where the image elongation becomes comparable to the slit-width of the spectrograph (0.5 arc-sec). At small zenith angles ADC correction is superfluous, for this reason the ADC module is mounted on linear slide that can be inserted into, or retracted from the optical beam. The proposed design is able to correct the dispersion up to diffraction limit between 0° and 70° of zenithal angle from 0.90 micron to 2.55 micron. It is only a proposed module, that will not be installed in this moment.

6. Calibration module (Lamps and Fabry-Perot)

The calibration module includes an optical system that focuses the calibration light onto slit. We foresee three calibration sources, namely a U-Ne lamp (l-cal), a high stabilizated halogen lamp (flat) and a Fabry Perot. Since the light is injected before the guider module, the calibration-image is simultaneously seen by the guider and by the spectrometer. Therefore, the fiber feed calibration light source can be conveniently used to optimize – and periodically check/correct – the relative positions of the image on the guider and on the spectrometer slit (i.e. to make sure that the position at which one sees a stars on the guider corresponds to the center of the slit).

Downloaded From: https://www.spiedigitallibrary.org/conference-proceedings-of-spie on 22 Jul 2020
Terms of Use: https://www.spiedigitallibrary.org/terms-of-use

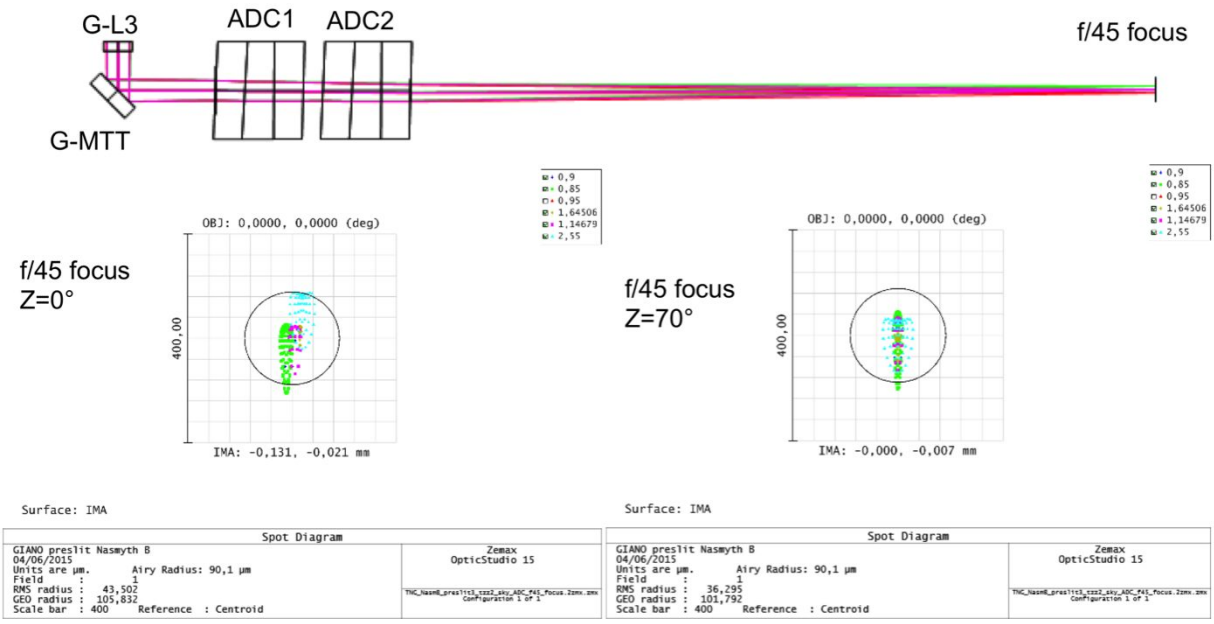

Figure 3 ADC module for GIARPS. Based on a couple of three cemented prisms.

7. Fabry-Perot Calibration module.

The Fabry Perot has been already tested at TNG using GIANO spectrograph in February 2016. Table 1 summarizes the characteristics of the FP cavities used during the tests. The diffused light from a halogen lamp was fed into the FP device using a short (~20 cm) fiber of ultra-low-OH silica. The very limited length of the fiber guarantees that its internal transmission remains >50% even at the longest wavelengths covered by the GIANO spectrometer. The exit of the FP device was connected to the ZBLAN fiber that feeds the calibration light to GIANO (see RD1). Input-fibers with different diameters (i.e. 100, 200 and 550 microns) were used to study how this parameter influences the contrast of the spectrum. The FP devices were used at ambient pressure and temperature, i.e. they were not suitable for measurements of stability. Measurements of stability would require vacuum (<1 mbar) and close-loop control of temperature to <0.1 K.

The integration time for all spectra was 10 seconds, i.e. the minimum allowed by the spectrometer. This implies that the level of illumination is not an issue for these types of calibrators. For comparison, the U-Ne directly illuminating the ZBLAN calibration fiber needs 300 seconds integration to achieve good s/n ratio in the Uranium lines.

The spectra were calibrated using flats and U-Ne exposures taken immediately after the FP and cell spectra.

Downloaded From: https://www.spiedigitallibrary.org/conference-proceedings-of-spie on 22 Jul 2020
Terms of Use: https://www.spiedigitallibrary.org/terms-of-use

Parameter	FP-GIARPS	FP-CRIRES+
Beam splitter	R=50% 0.97-2.5	
Spacing	3.0 mm	5.0 mm
Collimators	CaF_2 singlets	Off-axis metal mirrors (parabolae, fiber packaged) and tip-tilt stage
Collimated beam	10 mm	8 mm

Table 1 Main parameters of the FP cavity of GIARPS and CRIRES+

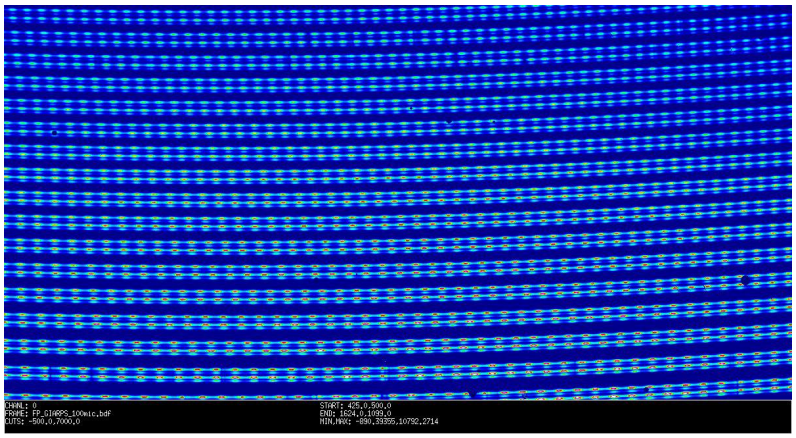

Figure 4 2D-spectrum of FP-GIARPS, portion of the echellogram covering the H-band

Figure 4 and Figure 5 show the extracted, wavelength-calibrated and normalized spectra of the central portions of all the orders covered by the GIANO spectrometer. The width of each panel corresponds to 1/10 of the spectral free-range in the given order. Evident is the decrease of contrast at the shorter wavelengths (order 80); this effect is produced by the drop of reflectivity intrinsic to the coating used in the beam-splitters used to build the FP cavities.

The features in the spectra of FP-GIARPS are prominent and well separated over the full spectral range; i.e. the device can be conveniently used as calibrator for GIARPS. All orders show that the contrast is smooth and only slowly varying, demonstrating that the cavity's reflectivity does not exhibit jumps. Thus, the finesse of the FP is also well controlled over the entire wavelength range.

Downloaded From: https://www.spiedigitallibrary.org/conference-proceedings-of-spie on 22 Jul 2020
Terms of Use: https://www.spiedigitallibrary.org/terms-of-use

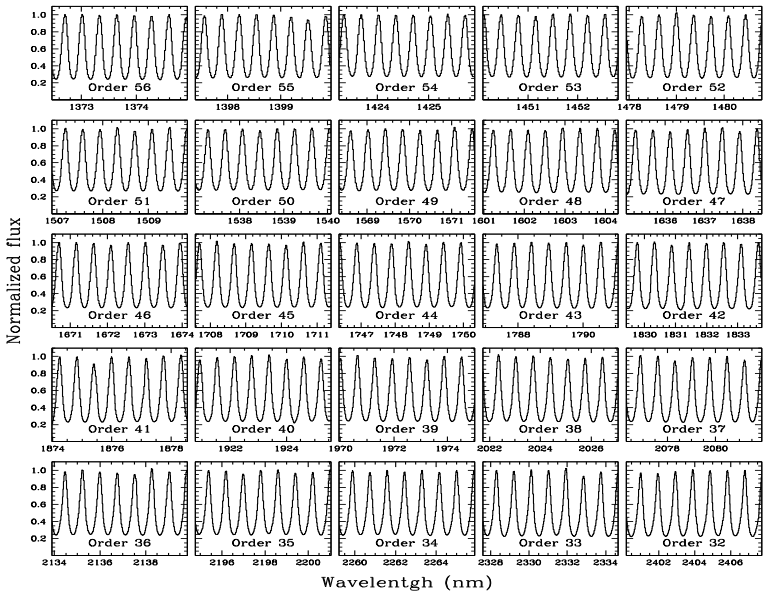

Figure 5 Extracted spectra of FP-GIARPS, from order 32 to order 56

In regions free of molecular absorption lines the overall transmission of the cell is about 80%, i.e. compatible with the reflection losses of the two windows. The pattern of absorption lines is similar to that observed at higher resolution (see ref. RD2). Best coverage is achieved in orders 32-35, where the molecular absorption features are per design most prominent and deepest. Overall, the line depths are between 75% and 35% in these orders at the resolving power of GIANO (R=50,000). The cell also covers parts of the H-band (orders 45-47, 50-51), yet with much smaller line density and depth.

8. Dichroic and guider module (G-DIC + GL5)

The actual input window of Giano Cryostat will be replaced with a 12° tilted window having a dichroic coating on its first surface: the reflected components will be used to realize the guider and the transmitted IR part will feed the spectrometer. In particularly the light with wavelength 850nm – 950nm will be reflected to the guider while the longer wavelengths (950-2400 nm) will be transmitted toward the spectrometer. The guider have no lenses: the f/11 focus will be direct on a suitable CCD camera using some neutral density filters mounted on a linear stage (G-FILT). The guider module has a special working modality in which a small commercial lens is inserted few centimeters before the CCD, in the same plane of the filters and using the same linear stage

Downloaded From: https://www.spiedigitallibrary.org/conference-proceedings-of-spie on 22 Jul 2020
Terms of Use: https://www.spiedigitallibrary.org/terms-of-use

and realizes an image of the telescope pupil on the guider: this to have the possibility to optimize the throughput of the whole system looking at the pupil image, that has not be vignected.

9. Absorption cell module (CELLS)

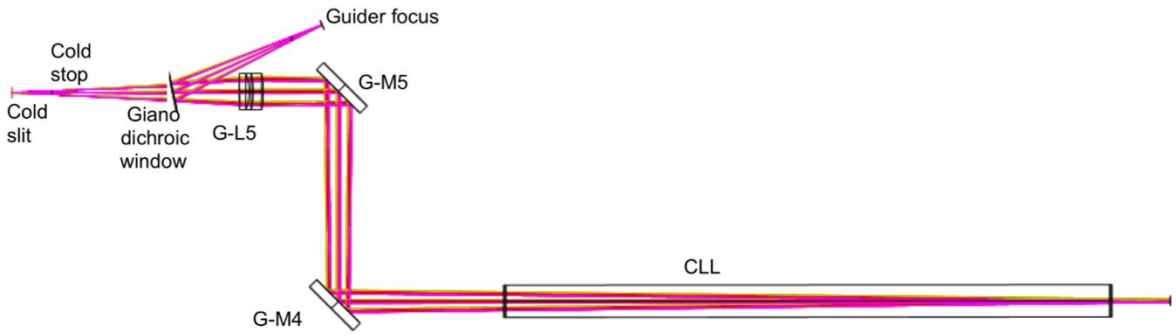

Figure 6 G-M4 and G-M5 are flat mirrors that realize a periscope to align the beam on the cold stop and on the cold slit of Giano. G-L5 realizes the correct f/11 beam with the pupil placed 90 mm before the slit.

While the GIANO calibration unit enables wavelength calibration by a U/Ne hollow-cathode lamp and the stabilized Fabry-Perot Etalon, a radial velocity precision in the m/s domain requires the simultaneous monitoring of the instrument stability during the observations, and co-located on the same detector pixels as the spectral lines of interest. In the visible regime, on low- to moderately stabilized spectrographs this is often achieved by the use of an iodine absorption cell placed into the telescope beam during sky observations. The absorption spectrum of the cell is thus simultaneously imprinted onto the stellar spectrum, and serves two purposes: a) the fiducial absorption lines can be used for wavelength calibration, particularly with a laboratory template spectrum at very high-resolution, in which the line positions are well known. The cell's spectral lines are b) prone to the instrumental profile and its variation. Hence, the simultaneous modelling of the instrumental profile can be used to track and correct for instrumental and illumination instabilities, whereas otherwise these effects contribute on the many m/s scale to the RV budget.

Downloaded From: https://www.spiedigitallibrary.org/conference-proceedings-of-spie on 22 Jul 2020
Terms of Use: https://www.spiedigitallibrary.org/terms-of-use

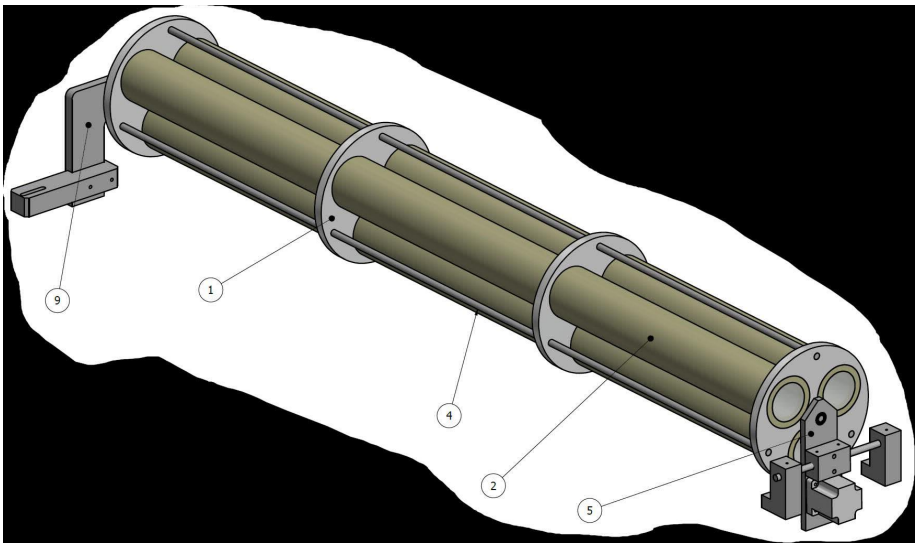

Figure 7 Figure shows the revolver system for the cell used by GIARPS.

On infrared spectrographs, molecular absorption features from distinct species allow to exploit the same principle at longer wavelengths. For GIANO, we have developed specialized absorption cells for the JHK spectral bands, based on the design demonstrated for VLT/CRIRES+ [INSERT REFERENCE TO #10]. Methane-13 and ammonia are particularly interesting species that provide a forest of ro-vibrational transitions within the H and K near-infrared bands. As their absorption coefficients are small at these wavelengths, the gases require a relatively high partial pressure or a large absorption path-length, in order to produce deep and useable spectral lines. At the same time, their intrinsic line widths must remain well below the instrumental profile of the spectrograph to facilitate its characterization. A mixture of gaseous NH3/C2H2/13CH4 [INSERT REFERENCE TO #10] is an ideally suited calibrator for the NIR in terms of broadband coverage, feature density, intrinsic chemical and spectral stability, hazard risk, and thermal RV stability in the telescope/dome environment. GIANO's multiplex advantage of recording the Y-K bands in one shot at R=50000 makes it possible to fully exploit gas-cell technique, and to push the RV precision to a few m/s for bright, early to mid-type M-stars.

A long-path absorption cell will be implemented with GIANO making use of the new space envelope available due to the GIARPS interface. Within the volume previously allocated to SARG, a path-length of 1.5m is feasible in the GIANO f/50 beam. Our cell design is shown in see Figure 7. A rotating revolver system intercepts the beam after the G-L4 lens. The revolver

Downloaded From: https://www.spiedigitallibrary.org/conference-proceedings-of-spie on 22 Jul 2020
Terms of Use: https://www.spiedigitallibrary.org/terms-of-use

holds two cell units (plus a free slot), each of them containing a protective tubing, thermal insulation, and the sealed cell vessel. The small deflection of the beam due to the cells' tilted windows will be compensated by the steering mirror when the CELLS module is active. The cells are optimized for the YJ and HK bands, in order to have suitable line depths. The long path-lengths imply a single-pass cell with imprinted spectral lines, whose line widths are governed by the instrumental profile of GIANO (see Figure 8). Reference spectra of the two absorption cells at much higher resolving power than GIANO's (R~1.000.000) from Fourier- Transform spectroscopy will enable superior line profile monitoring and wavelength reference a anchors.

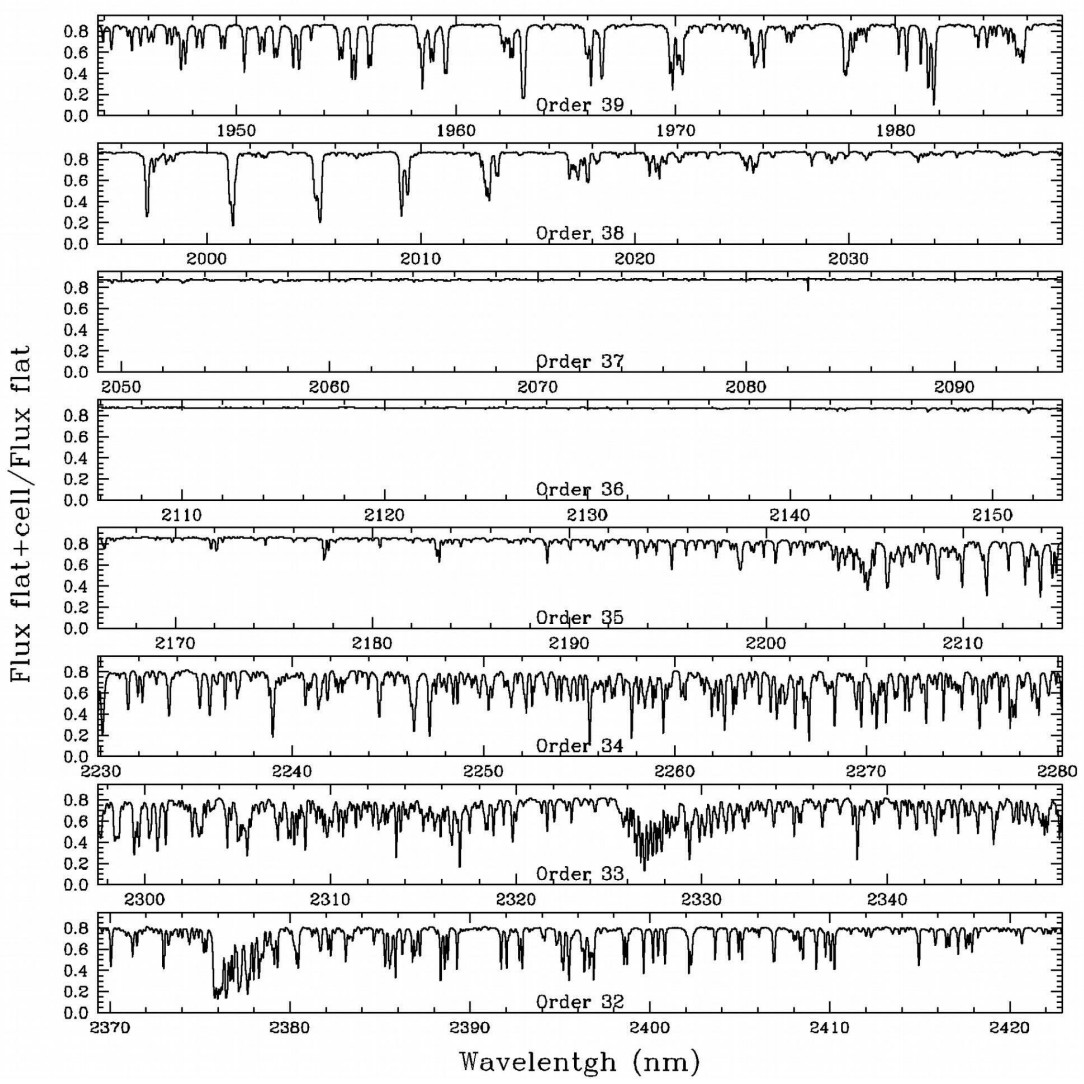

Figure 8 Test cell for GIARPS as measure using GIANO spectrograph (K-Band)

Downloaded From: https://www.spiedigitallibrary.org/conference-proceedings-of-spie on 22 Jul 2020
Terms of Use: https://www.spiedigitallibrary.org/terms-of-use

10. Periscope module (G-M4, G-M5)

The periscope (see Figure 6) is used to align the optical axis of the telescope interface with the optical axis of the spectrograph. It consists of two flat mirrors mounted on manually adjustable translation and rotation mechanical adjustments. The adjustment can compensate shifts/tilts of many cm/degrees, i.e. the periscope simplifies the design and manufacturing the mechanical structure holding the spectrometer.

11. Re-imaging module, GL4 + GL5

This sub-system focuses the light onto the entrance slit of the spectrometer realizing the image of the pupil 90 mm before the slit itself. It is mounted inside a mechanical structure fixed to cryostat near the entrance window.

- G-L4 a Singlet lens placed 40 mm after the f/50. This lens is used as field lens and is necessary to place the pupil image in the correct position for the following triplet lens that is the input lens placed few centimeters before the cold input windows of Giano.
- G-L5 is a triplet lens that transforms the f/50 beam in an f/11 beam placing the focus at the correct position that is on the cold Slit and places the pupil image on the mechanical Cold Stop of Giano that is a 10.00+/-0.05 mm diameter knife edge hole placed at 90+/-3 mm before the slit. Input Window: this is the input windows of Giano and is part of the cryostat and not of the prelist system. It is a 10 mm thickness Infrasil window having its second flat surface placed 308 +/- 5 mm before the cold stop and 298 +/- 5 mm before the cold slit.

12. Slit Viewer module

This sub-system is used in daytime to find the exact position of the Giano's slit on the guider camera: this to know the exact position onto which to center the star during observation in nighttime. It is based on a reference star projected onto the stainless steel slit of Giano: the light reflected by this surface is reimaged on an auxiliary low cost CMOS camera. This part is describer in section 4.

Downloaded From: https://www.spiedigitallibrary.org/conference-proceedings-of-spie on 22 Jul 2020
Terms of Use: https://www.spiedigitallibrary.org/terms-of-use

3 Guider on Giano's input window

Figure 9 shows the use of the input window of Giano Cryostat as reflecting surface for the guiding: replacing the actual antireflection coated input window of Giano (100 mm diameter, 10 mm thickness) with a smaller (80 mm diameter) and tilted dichroic window (12° approx.).

In this solution the guider camera CCD plane would be optically conjugated with the Cold Slit of Giano, looking at the same f/11 beam that illuminates the slit. The great advantage of such a location for the guiding camera is that it is grounded with respect the cryostat and supposing a

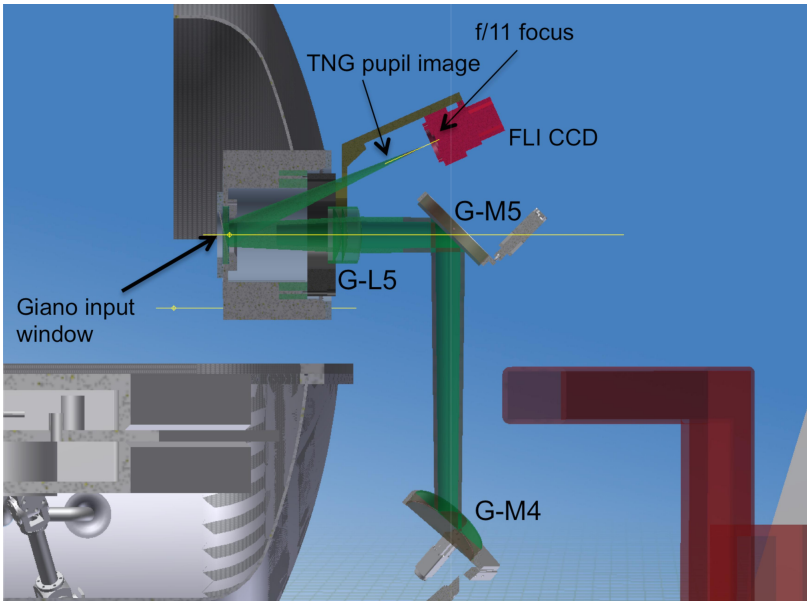

Figure 9 Guider placed on the reflected beam of Giano input window. Giuder CCD is grounded with respect the input window and the cold slit.

constant temperature regime of for the cold optical table, this it means it is grounded with the slit, too.

Downloaded From: https://www.spiedigitallibrary.org/conference-proceedings-of-spie on 22 Jul 2020
Terms of Use: https://www.spiedigitallibrary.org/terms-of-use

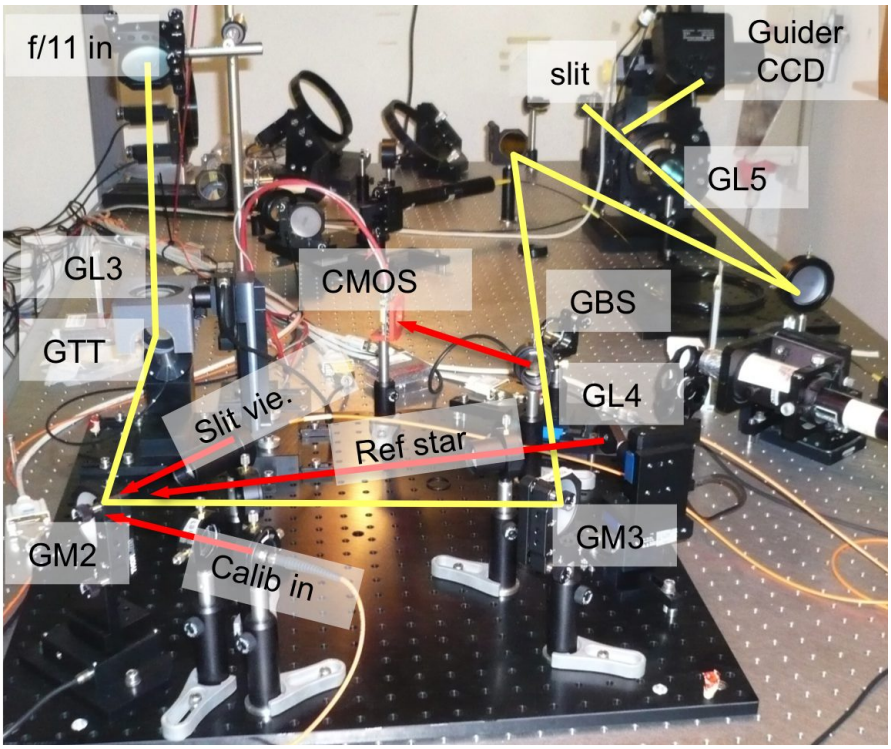

Figure 10 GIARPS board in laboratory during assembling in Arcetri.

So looking at the star image on the guiding camera it will be possible to close a control loop with the Tip-Tilt mirror keeping the star on the slit during observation.

90 mm before the guiding focus an image of the telescope pupil is located: using a low cost CMOS camera mounted on a sliding stage (actually used for the Photometer in Giano's fiber preslit), it will be possible to use this pupil to verify the good alignment with the telescope and in case to adjust G-M5 and G-M4 to well align the input optical axis.

For this solution (guiding camera on giano's reflected beam) we have to change the position of G_L5 with respect the actual value, but this is possible without optical degradation.

4 The Slit Viewer for Giano

The slit viewer is the key device to find the guiding positions onto which in nighttime GIANO spectrograph has to be aligned. In day time the light coming from the Slit Viewer light source is reflected back from the cold slit of Giano and collected on the Slit Viewer CMOS by a pelicon Beam Splitter located some centimeters after the f/50 focus. The light coming from a high flux LED is injected using a 400 um fiber (BFY400LS02 by Thorlabs) and a commercial 50 mm

Downloaded From: https://www.spiedigitallibrary.org/conference-proceedings-of-spie on 22 Jul 2020
Terms of Use: https://www.spiedigitallibrary.org/terms-of-use

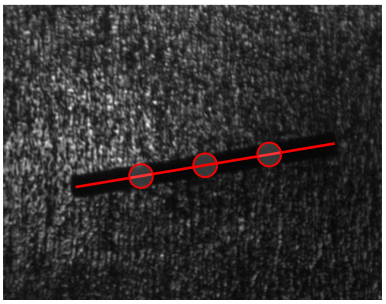

Figure 11 A,B,C guiding positions calculated by the IDL software looking at a slit viewer image.

focal length lens to have a diffused illumination of the slit. On the CMOS the shape of the slit is recognized by an appropriate software and the three guiding positions are found out: one having the star in the middle point of the slit (C position) and other two located at ¼ and ¾ of slit length (A, B positions) as visible in Figure 11. After this, the reference star is switched on, G-M2 placed at the correct angle to feed the guider and the three motor positions C,A,B of the fiber that realizes the reference star are registered: for each reference star position it will be possible to define the corresponding position on the guider CCD. Those positions will be used in nighttime to guide the telescope or the Tip Tilt mirror on the slit.

It is important to emphasize that this Slit Viewer can work in daytime using a fiber feed LED. The possibility to look at the real position of a simulated star with respect the slit gives us the possibility to find the exact pixel position on the guider camera onto which the star have to be centered during observation in night-time. The presence of the beam splitter located near the intermediate focus, will be necessary only during daytime preliminary check.

5 Spectrophotometric tests

The spectrophotometric tests were performed by means of a double beam spectrophotometer (Perkin Elmer, Lamda 900) in configuration of normal transmittance. Along the reference beam optical path no material is inserted: thus the reference is air and transmittance measurements are absolute.

Specular reflectance measurements, within 6° angle, were achieved with the Relative Specular Reflectance Accessory (by Perkin Elmer) and a BK7 glass (absolute reflectance 4%) as reference.

Two one-side-coated samples were tested: CaF2 and FTM16 substrates with an eight-layers deposition on one surface, designed as to enhance transmission in the near infrared range 870-2500 nm.

In order to evaluate the absorption of the sole deposition, transmittance must be corrected according the second face (with no deposition) Fresnel reflection as to obtain the transmission of the first face [TT(λ)]. In reflectance measurements the second face reflectance is not collected by

Downloaded From: https://www.spiedigitallibrary.org/conference-proceedings-of-spie on 22 Jul 2020
Terms of Use: https://www.spiedigitallibrary.org/terms-of-use

the optical system, but measurement must be corrected according the BK7 reflectance. Considering the hypothesis of zero absorbance, transmission [TR.NoAbs(λ)] can be calculated from reflectance measurement [R(λ)] as TR.NoAbs(λ) = 1 - R(λ) . In Figure 12 transmittance TT(λ) and TR.NoAbs(λ) are reported for the two samples. As shown, in CaF2 sample the absorbance is almost zero, while in FTM16 the absorbance spectrum of the layer is higher for lower wavelengths as difference between the two spectra increases as the wavelength decreases.

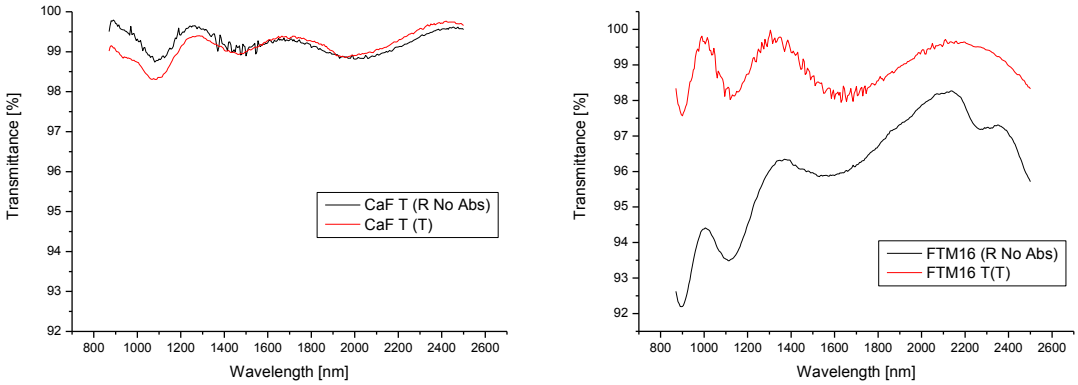

Figure 12 Spectral transmittance of the first face of CaF2 and FTM16 samples. Spectra "T" are obtained from transmittance measurement, spectra "R No Abs" from reflectance measurements. Spectral differences between red and black lines are due to face absorption.

6 Engineering software

The server/client software is the essential low level structure of the engineering software for the GIARPS instrument. It is used to control a list of devices included in the preslit of the instrument. The engineering software is necessary for laboratory alignment and test activities, and also for the last phases of the instrument installation at the telescope.

1. Software requirements

According to the foreseen application, the requirements related to this software structure are the followings: the ultimate level should be an IDL interface; any source of unlimited code freezing should be avoided; by necessity It should be possible to manage the devices directly from a terminal window.

Downloaded From: https://www.spiedigitallibrary.org/conference-proceedings-of-spie on 22 Jul 2020
Terms of Use: https://www.spiedigitallibrary.org/terms-of-use

The software solution complies with all the above needs in the following ways: building a multi-level communication structure where the higher level consists of IDL procedures; carefully managing all the communications toward the devices through time-out variables; using the python programming language.

The GIARPS server/client software structure is based on two programs.

The first one is the client program (gclient.py code file), whose function is to forward commands and commands answers between external programs (as IDL or the terminal) and the server program.

The second one is the server program, whose functions are to manage the incoming commands and commands answers through a unified communication protocol (gserver.py code file) and to establish a low level customizable connection toward each device (gdevice.py code file).

The prerequisite to conveniently use this structure is that each device should be reachable through Ethernet connection.

2. The devices management

The GIARPS preslit includes a high number of devices to be controlled. All of them have been classified on the bases of the controller type (PI Mercury, Raspberry, Redpitaya, etc), the communication protocol (TCP, UDP, SSH), and the capability of Ethernet connection. Each device class is formally defined as a python class in the gclient.py code file.

Since the Ethernet connection is needed, all devices with serial command input are linked to a serial-to-Ethernet port server (provided with a unique ip address and 16 ports, one port for each device). Similarly devices with a USB connection are reachable through a usb-Ethernet converter.

3. The software structure

At the start-up the server program establishes a socket connection toward each device. One single thread starts for each device socket, and this link is used from the server program to send commands to the device, to receive the device answers and to periodically (each 2 sec) check that the device connection status is alive.

Downloaded From: https://www.spiedigitallibrary.org/conference-proceedings-of-spie on 22 Jul 2020
Terms of Use: https://www.spiedigitallibrary.org/terms-of-use

As explained in the following figure, an IDL procedure/function can send a command request to the client program via the SPAWN IDL procedure. The client program sends the command to the server program via a TCP communication. The server program sends the command to the addressed device, using the appropriate format and serializing possible multiple requests. If the command implies an answer, the server program receives it and forwards it to the client program, who in turn forwards it to the IDL procedure. Instead than through the IDL procedure, the client software can also be run directly from a terminal window.

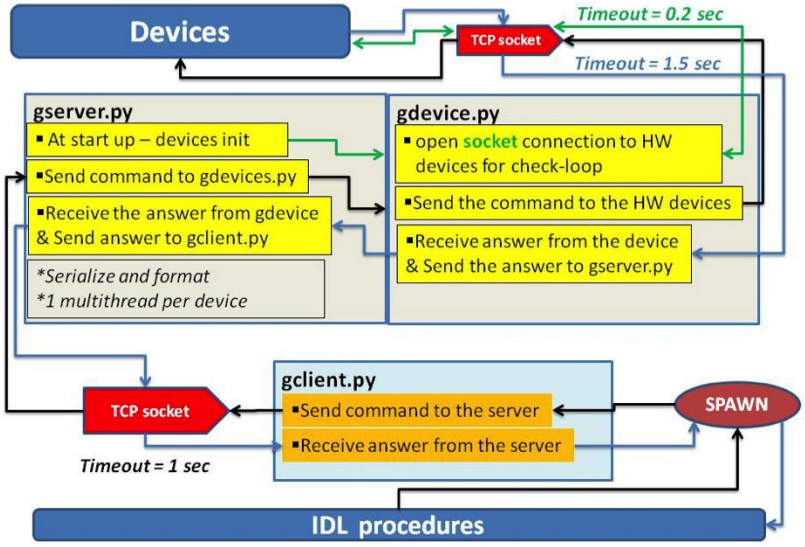

Figure 13 : Server-client structure scheme. The client program is identified by the light blue box, the server program is identified by the two grey boxes

7 Conclusions

The possibility into having two very high resolution spectrographs like Giano (R=50000) and HARPS-N (R=115000) working in parallel from 363 to 693 nm and from 900 to 2500 nm is a great opportunity for the scientific community interested into the detection of Earth-mass planets and at the same time optimizes the study of planets around cool stars. The very broad wavelengths range is particularly important to discriminate false RV signals caused by stellar activity and this opportunity will be offered to the scientific community in 2017.

Downloaded From: https://www.spiedigitallibrary.org/conference-proceedings-of-spie on 22 Jul 2020
Terms of Use: https://www.spiedigitallibrary.org/terms-of-use

References

1. Oliva, E., & Origlia, L. 1992, A&A, 254, 466
2. L.Bruno et at., " The prelist system og GIANO-TNG", SPIE2006
3. Oliva, E., Origlia, L., Maiolino, R., et al. 2012, SPIE, 8446, 3TO
4. Oliva, E., Biliotti, V., Baffa, C., et al. 2012, SPIE, 8453, 2TO
5. G.Avila, 8446-370, SPIE, 2012
6. K. McCoy, L. Ramsey, S. Mahadevana, S. Halversona, S. Redmanc, "Optical fiber modal noise in the 0.8 to 1.5 micron region and implications for near infrared precision radial velocity measurements", 2012
7. U. Lemke1, J. Corbett, J. Allington-Smith, and G. Murray, " Modal noise prediction in _fibre-spectroscopy I:visibility and the coherent model",2011.
8. M. Iuzzolino et al, SPIE 9147, 231 (2014).
9. A. Tozzi et al., 2014, *"The fiber-fed pre-slit of GIANO at TNG"*, SPIE 9147E, 9NT
10. U. Seemann et al., *"Wavelength calibration from 1-5 microns for the CRIRES+ high-resolution spectrograph at VLT",* 2014, SPIE 9147E, 5GS
11. R. Gamache et al., 2014, Journal of Quantitative Spectroscopy & Radiative Transfer, 135, 30
12. F. Rodler et al, 2011, A&A 532, 31
13. U. Seemann et al., *"Wavelength calibration from 1-5 microns for the CRIRES+ high-resolution spectrograph at VLT",* 2014, SPIE 9147E, 5GS
14. R. Gamache et al., 2014, Journal of Quantitative Spectroscopy & Radiative Transfer, 135, 30
15. F. Rodler et al, 2011, A&A 532, 31

Downloaded From: https://www.spiedigitallibrary.org/conference-proceedings-of-spie on 22 Jul 2020
Terms of Use: https://www.spiedigitallibrary.org/terms-of-use