Design of an afocal telescope for the ARIEL mission

Vania Da Deppo*[a,b], Kevin Middleton[c], Mauro Focardi[d], Gianluca Morgante[e], Emanuele Pace[f], Riccardo Claudi[b], Giuseppina Micela[g]

[a] CNR-Institute for Photonics and Nanotechnologies Padova, Via Trasea 7, 35131 Padova, Italy
[b] INAF-Osservatorio Astronomico di Padova, Vicolo dell'Osservatorio 5, 35122 Padova, Italy
[c] RAL Space-STFC Rutherford Appleton Laboratory, Harwell Campus, Didcot OX11 0QX, UK
[d] INAF-Osservatorio Astrofisico di Arcetri, Largo E. Fermi 5, 50125 Firenze, Italy
[e] INAF-IASF Bologna, Area della Ricerca, Via Piero Gobetti 101, 40129 Bologna, Italy
[f] Dept. of Physics and Astronomy-Università degli Studi di Firenze, Largo E. Fermi 2, 50125 Firenze, Italy
[g] INAF-Osservatorio Astronomico di Palermo, Piazza del Parlamento 1, 90134 Palermo, Italy

ABSTRACT

ARIEL (Atmospheric Remote-sensing Infrared Exoplanet Large-survey) is one of the three candidates for the next ESA medium-class science mission (M4) expected to be launched in 2026. This mission will be devoted to observe spectroscopically in the infrared (IR) a large population of known transiting planets in our Galaxy.

ARIEL is based on a 1-m class telescope ahead of two spectrometer channels covering the band 1.95 to 7.8 microns. In addition there are four photometric channels: two wide band, also used as fine guidance sensors, and two narrow band. During its 3.5 years operations from L2 orbit, ARIEL will continuously observe exoplanets transiting their host star.

The ARIEL design is conceived as a fore-module common afocal telescope that will feed the spectrometer and photometric channels. The telescope optical design is an off-axis portion of a two-mirror classic telescope coupled to a tertiary off-axis paraboloidal mirror providing a collimating output beam.

The telescope and optical bench operating temperatures, as well as those of some subsystems, will be monitored and fine tuned/stabilised mainly by means of a thermal control subsystem (TCU - Telescope Control Unit) working in closed-loop feedback and hosted by the main Payload electronics unit, i.e. the Instrument Control Unit (ICU).

In this paper the telescope requirements will be given together with the foreseen design. The technical solution chosen to passively cool the telescope unit will be detailed discussed.

Keywords: space instrumentation, telescope, optical design, exoplanetary science, thermal control, ICU

1. INTRODUCTION

ARIEL (Atmospheric Remote-Sensing Infrared Exoplanet Large-survey) is one of the M4 proposed missions in the framework of the ESA Cosmic vision program [1]. It is a mission conceived to study the atmospheres of exoplanets orbiting close to nearby stars. The aim is to measure the atmospheric composition and structure of hundred(s) of exoplanet atmospheres, using spectroscopy in the infrared wavelength. This will allow to begin to explore the nature of exoplanet atmospheres and interiors and study the key factors affecting the formation and evolution of planetary systems.

ARIEL will provide spectroscopic information on the atmospheres of a large selected sample of exoplanets (~500) allowing the compositions, temperature (profile), size and variability to be determined at a level never previously attempted [2].

ARIEL will measure the reflected/emitted/transmitted spectra of a sample of exoplanetary atmospheres over the visible to the thermal IR wavelength range. Planets under study will extend from gas giants, i.e. Jupiter- or Neptune-like planets with masses greater than 100 Earth masses, to super-Earths, i.e. about 5 Earth masses, having temperatures greater than 600 K [3].

*vania.dadeppo@ifn.cnr.it; phone +39-049 9815639; fax +39-049 774627

Space Telescopes and Instrumentation 2016: Optical, Infrared, and Millimeter Wave, edited by Howard A. MacEwen, Giovanni G. Fazio, Makenzie Lystrup, Proc. of SPIE Vol. 9904, 990434 · © 2016 SPIE · CCC code: 0277-786X/16/$18 · doi: 10.1117/12.2230969

Downloaded From: http://proceedings.spiedigitallibrary.org/ on 08/03/2016 Terms of Use: http://spiedigitallibrary.org/ss/TermsOfUse.aspx

For its ambitious scientific program, ARIEL is designed as a dedicated survey mission for transit and eclipse spectroscopy, capable of observing a large and well-defined planet sample within its 3.5-year mission lifetime. Using the knowledge of the planetary ephemerides, transit and eclipse spectroscopy methods allow to differentiate the signals coming from the planet and the host star. This enables to measure atmospheric signals from the planet at levels of at least 10^{-4} relative to the star and, given the bright nature of targets, also permits more sophisticated techniques, such as phase curve analysis and eclipse mapping, to give a deeper insight into the nature of the atmosphere. This requires a specifically designed, stable payload and satellite platform with broad, instantaneous wavelength coverage to detect many molecular species, probe the thermal structure, identify clouds and monitor the stellar activity. The wavelength range proposed (~1.95 to 7.8 μm) covers all the expected major atmospheric gases from e.g. H_2O, CO_2, CH_4, NH_3, HCN, H_2S through to the more exotic metallic compounds, such as TiO, VO, and condensed species.

ARIEL's design is based on the successful study of the M3 EChO [4] mission with simplifications and mass reductions to keep within the M4 programmatic constraints. The instrument design uses only technologies with a high degree of technical maturity. Transit spectroscopy means that no angular resolution is required and detailed performance studies show that a telescope collecting area of 0.64 m^2 is sufficient to achieve the necessary observations on all the ARIEL targets within the mission lifetime. ARIEL will carry a single, passively-cooled, highly capable and stable spectrometer covering 1.95–7.80 μm with a resolving power of about 200 mounted on a single optical bench with the telescope and a Fine Guidance Sensor (FGS) that provides closed-loop feedback to the high stability pointing of the spacecraft. The FGS provides simultaneous information on the photometric stability of the target stars.

The satellite will be placed into an eclipse free (Earth and Moon) orbit around Sun-Earth L2 point, this allows to maximise the thermal stability and field of regard. A payload consortium funded by national agencies will provide the full ARIEL payload (telescope and instrument) and ESA will provide the spacecraft. The ground segment responsibility and implementation will be split between ESA and the payload consortium. ARIEL is complementary to other international facilities (such as TESS [5], to be launched in 2017/2018) and will build on the success of ESA exoplanet missions such as Cheops [6] and PLATO [7], which will provide an optimized target list prior to launch.

2. SPACECRAFT AND SCIENCE PAYLOAD

2.1 Spacecraft architecture

A horizontal configuration, similar to the one used/implemented in the EChO phase A design, has been adopted as baseline (see Figure 1).

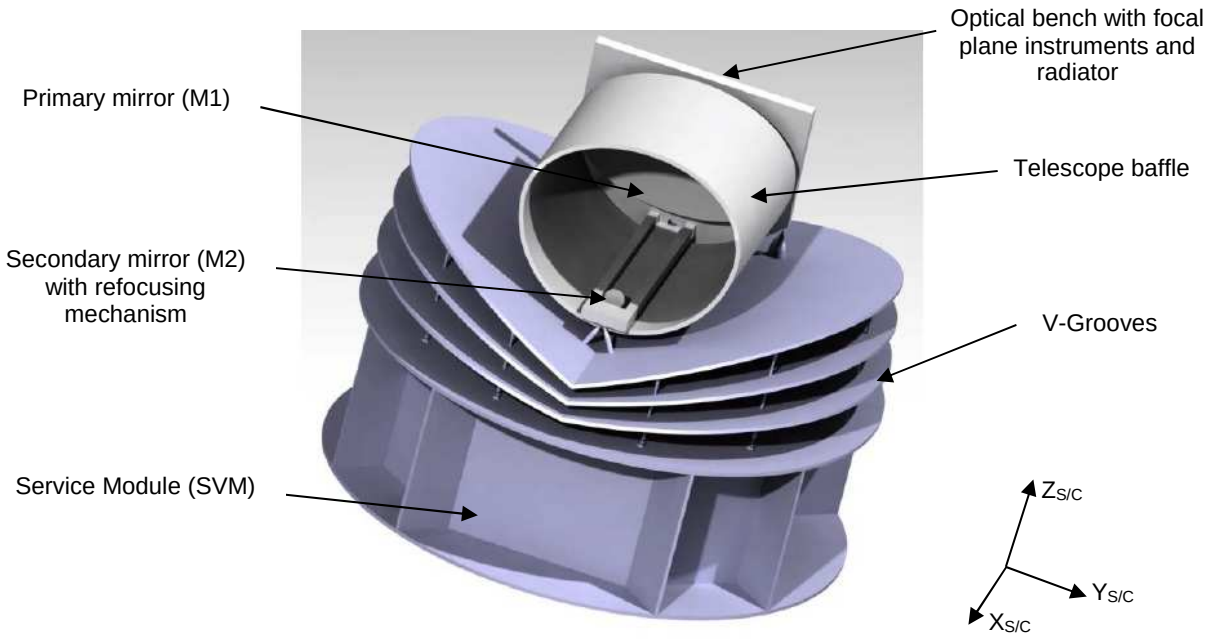

Figure 1. Schematics of ARIEL spacecraft baseline configuration. Main components and S/C reference system are highlighted.

Downloaded From: http://proceedings.spiedigitallibrary.org/ on 08/03/2016 Terms of Use: http://spiedigitallibrary.org/ss/TermsOfUse.aspx

As depicted in Figure 1, the X axis of the ARIEL reference system corresponds with the telescope pointing axis, the Z one is the launch vehicle symmetry axis (vertical) and Y completes the right-handed triad. The instrument boxes are accommodated on the optical bench behind M1, enabling a direct view to deep space to provide direct radiative cooling for critical elements such as NIRPhot detectors (see par. 2.5). The Sun is located below the platform. The V-Grooves and volumes are designed to accommodate a ±25° angle clearance about the Y-axis wrt the Sun vector.

To achieve the required photometric stability, a good pointing stability needs to be provided by the spacecraft during one observation. For this purpose, the FGS looking to the target star in parallel to the spectrometer will be accommodated on the payload and used by the AOCS, this module will also house the NIR photometer channels.

The spacecraft can be considered as composed of a cold Payload module (PLM), containing the telescope and the instruments with their thermo-mechanical hardware, and a warm Service module (SVM) that includes all mission supporting systems together with the PLM and cryogenic control units.

2.2 Payload Module Architecture

The ARIEL PLM consists of an integrated suite of telescope, spectrometer and FGS/photometer along with the necessary supporting hardware and services (such as optical bench, harnesses thermal control etc). The mission carries a single dedicated payload for its primary mission objectives; this payload will be developed and delivered by the ARIEL payload consortium [8]. A block diagram of the payload architecture is shown in Figure 2.

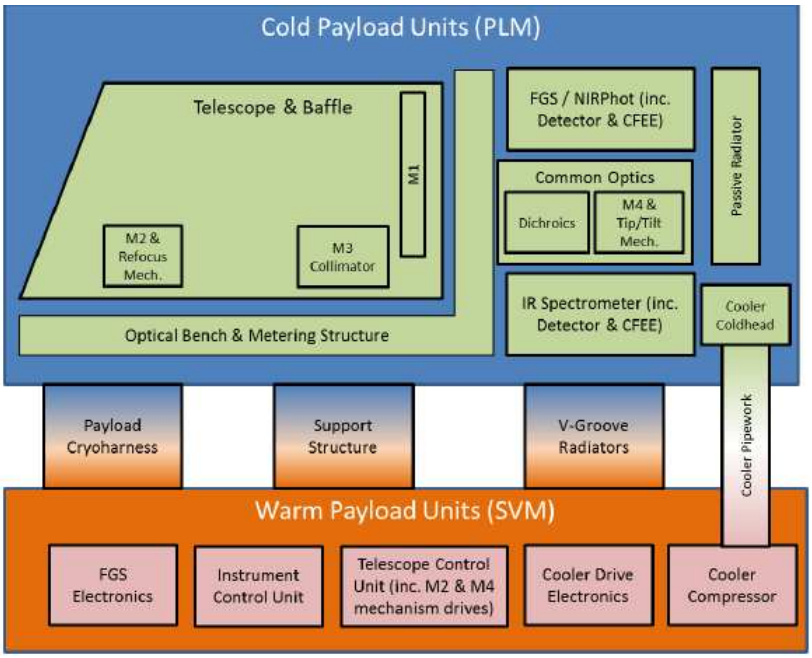

Figure 2. ARIEL baseline payload block diagram architecture.

The ARIEL afocal telescope is an off-axis configuration and consists of 3 mirrors (M1, M2 and M3). There will be a baffle around M1 to control out of field scattered straylight. The telescope is followed by a tip/tilt M4 mirror with a fine steering mechanism, which closes the loop from the FGS and AOCS and minimizes the effect of the reaction wheel spikes. Then a number of plane dichroic mirrors split the light to redirected it toward the fine guidance and spectrometer modules.

Since calibration requirements are still TBC, additional hardware might be added within the instrument volume. An IR calibration source based on the heritage of the JWST MIRI calibration system [9] and injected in the center of the M4 mirror has been considered as the first possible solution.

The key aspects of the payload are summarized in Table 1.

Downloaded From: http://proceedings.spiedigitallibrary.org/ on 08/03/2016 Terms of Use: http://spiedigitallibrary.org/ss/TermsOfUse.aspx

Table 1. ARIEL key payload aspects.

Key payload aspects
Afocal 3-mirror telescope, off-axis system, ~1.1 m x 0.7 m elliptical M1, unobstructed (effective area 0.64 m^2), diffraction-limited at 3 μm.
Highly-integrated broadband spectrometer instrument with modular architecture. Continuous wavelength coverage from 1.95–7.8 μm in baseline design, with resolving power of $\lambda/\Delta\lambda$ ~200.
Four channels FGS providing guidance in two bands (0.8–1.0 μm and 1.8–1.9 μm) and two photometric bands (0.50–0.55 μm and 1.65–1.70 μm).
Common optical train for all spectrometers and the fine guidance system optical module.
Actively cooled MCT detectors at ~40 K for spectrometer and passively cooled detectors ~60–70 K for FGS.

The PLM will interface to the SVM via a set of thermally isolating support struts, or bi-pods, and will be radiatively shielded from the SVM and the solar input loads by a set of 3 V-Grooves (VGs). The isolating supports and VGs are proposed to fall under the responsibility of the spacecraft prime contractor, all hardware fully in the cold zone of the spacecraft will be provided by the consortium. This enables a completely aligned and verified payload to be delivered to spacecraft level, thereby minimizing the complexity (and risks) associated with the full spacecraft AIV program and allowing the best possible calibration of the payload without the complexity associated with a full S/C test. An active cooler is baselined for the detectors of the spectrometer that require an operating temperature ≤ 40 K.

The baseline design of the PLM includes two active mechanisms in the payload. The fist is the refocusing mechanism on the telescope M2 mirror, which is used to ensure that the alignment and image quality of the telescope system are good after launch and cooldown. The second is the tip-tilt mechanism on M4 used as part of the AOCS system to close the loop from the FGS.

Table 2. ARIEL cold payload unit.

Unit name	Unit description
Telescope unit	Incorporating M1, M2 and M3 mirrors, a potential re-focusing mechanism on the M2 mirror, the telescope structure and baffles. Mounts onto payload optical bench.
Optical bench (OB)	An optical bench/metering structure onto which both the telescope items and the other instruments are mounted. Mounts from S/C provided struts with quasi-kinematic mounting. Passively cooled.
Common optics (COM)	Mirrors and dichroics linking telescope and instrument – directly mounted on optical bench. Thermally controlled via the optical bench. Including an M4 mirror which may be mounted on a tip-tilt mechanism, the dichroics to split the FGS and spectrometer light, formatting optics to inject the light into the spectrometer correctly, and potentially a common calibration source for the payload.
ARIEL IR Spectrometer (AIRS)	Primary science payload. Optical module with optical interface to common optics – mechanically mounts on optical bench. Thermally controlled via the optical bench for the structure and optics and via cold strap to the payload radiator for the detector. Including all optics and structure plus detector and cold front end electronics (cFEE).
Fine Guidance Sensor (FGS)	Optical module with optical interface to common optics – mounts on optical bench. Thermally controlled via the optical bench for the structure and optics and via cold strap to the payload radiator for the detector.
ARIEL Thermal hardware (ATH)	Dedicated radiator for detectors and optical module cooling plus thermal straps to provide detector interfaces. Mounts off OB.
ARIEL cryocooler	The cryogenic active system is based on a mechanical compressor (heritage of the Planck mission) feeding a JT cold end. Neon is used as the cryogenic fluid to reach temperatures in the 28–36 K range.

Downloaded From: http://proceedings.spiedigitallibrary.org/ on 08/03/2016 Terms of Use: http://spiedigitallibrary.org/ss/TermsOfUse.aspx

The ARIEL cold units are optically coupled via a common optics module and all referenced to the common optical bench. The units are thermally isolated by the S/C provided VG shields and the detectors are cooled by a dedicated radiator and the active cooler cold end, integrated on the OB. The main cold units are summarized in Table 2.

The baseline architecture splits the payload into two major sections, the cold payload module (PLM) and the items of the payload that are mounted within the spacecraft service module (SVM).

2.3 Service Module Architecture

The ARIEL warm units are integrated in the SVM. These include the payload electronics, which consists of three boxes that act as Remote Terminal Units (RTUs) via Spacewire to the S/C Command and Data Management System (CDMS). All high level commands, operational sequencing and data storage are within the S/C CDMS, there is no assumed intelligence within the units. The warm units are summarized in Table 3.

Table 3. ARIEL warm payload unit.

Unit name	Unit description
Instrument Control Unit (ICU)	Drives for spectrometer detectors, calibration source, thermistors (including those mounted on OB) etc. Command and data handling, compression and processing (if needed), formatting. I/O to CDMS.
FGS Electronics (FGE)	Drives for FGS detectors, thermistors etc. Command handling. Data handling, compression (if needed), processing (if needed) and formatting. FGS data processing. I/O to CDMS via Spacewire.
Telescope Control Unit (TCU)	Drives for M2 actuators, heaters, thermistors etc. Command handling. Data formatting. I/O to CDMS via Spacewire. The TCU will be also in charge of controlling the Refocusing Mirror (M2) mechanism and the Fine Steering tip/tilt Mirror (M4) mechanism thanks to proper electronic driver sections.
Cryoharness	Harness connecting warm and cold payload units including internal harnessing.
Cryocooler compressor	The active cooling system compressor is based on a Planck-like mechanical system, with vibration reduction capabilities. Its task is to pressurize the low pressure gas returning from the cold end feeding it back to the JT expander.

2.4 Payload module mechanical design

The main mechanical units composing the PLM are:

- the V-Grooves,
- the bipods and supporting struts,
- the Telescope Assembly (mirrors, struts and baffle),
- the Optical Bench,
- the Instrument Box (modules, common optics, radiator).

The VGs are high efficiency, passive radiant coolers, providing the first stage of the PLM cooling system. The Planck mission has definitely demonstrated their efficiency as passive cooling systems [10]. Parasitic heat from warmer sections of the S/C is intercepted by the VGs and radiated to space after multiple reflections between the adjacent shields. To achieve this, VGs surfaces must have a very low emittance coating, that is a high reflection/mirroring material is needed to reflect heat radiation. Only the upper surface of the last VG (VG3), exposed to the sky, is black coated with a high emissivity material to maximize the radiative coupling, and so heat rejection to deep space. VGs consist of a set of three specular shields, composed of six half circles arranged in a “V-shaped” configuration, angled along the diameter parallel to the S/C X axis (see Figure 1). A constant angle of 7° has been assumed as the inclination between VGs, resulting in a set of 7°-14°-21° for the three shields, separated by a gap of 100 mm at the vertices. VGs are mechanically designed as a simple sandwich of Aluminum alloy (series 1000 or 6000) layers.

Downloaded From: http://proceedings.spiedigitallibrary.org/ on 08/03/2016 Terms of Use: http://spiedigitallibrary.org/ss/TermsOfUse.aspx

The PLM is supported by three bipods mounted onto the PLM/SVM interface plate. One bipod is at the front of the telescope baffle in central position. The other two are on the rear side of the Telescope Assembly, supporting the OB and the baffle on two points. The VGs are also mechanically and thermally attached to the three bipods plus the extra support provided by eight auxiliary struts (TBC). The need for these extra supports and their thermo-mechanical design will be investigated in the next phase of the analysis. Bipods preliminary thermo-mechanical configuration is based on the Planck design. They are assumed as hollow cylinders made of GFRP (R-Glass + Epoxy), a low conductive material with good structural properties. To increase their mechanical stiffness the inner volume of the cylinders is filled with low thermally conductive rigid foam. The eight extra supporting struts for the VGs are positioned in the outer boundary part of the PLM in order to support the radiators' edges. They are designed as hollow GFRP cylinders extending from the SVM/PLM interface to the lower surface of the last VG.

2.5 FGS and its objectives

The Fine Guidance System (FGS) main task is to ensure the centering, focusing and guiding of the satellite, but it will also provide high precision astrometry and photometry of the target for complementary science. In particular, the data from the FGS will be used for de-trending and data analysis on ground. The sensor uses star light coming through the optical path of the telescope to determine the changes in the line of sight of the ARIEL instrument. The attitude measurement is then fused with the rate information from the star tracker, and used as input for the control loop stabilizing the spacecraft through the high performance gyros.

To meet the goals for guiding and photometry, four spectral bands are defined:

- FGS – Prime: 0.8–1.0 µm,
- FGS – Redundant: 1.8–1.9 µm,
- NIR-Phot1: 0.50–0.55 µm,
- NIR-Phot2: 1.65–1.70 µm.

The information from all the channels is used as a stellar monitor and to provide photometric information to constrain the VIS/NIR portion of the exoplanet spectra. The information from FGS prime channel will be used as the nominal FGS information to feed into the AOCS. In case of failure in the system then the information from the other channels can be used instead. The spectral bands are selected from the incoming light using dichroic filters (see Figure 3).

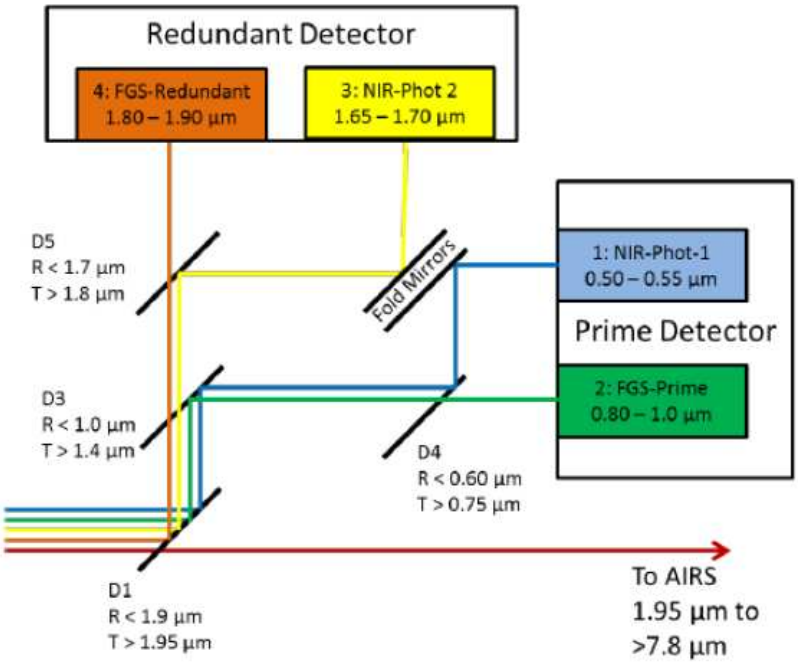

Figure 3: Scheme of the FGS channels and dichroics system.

Downloaded From: http://proceedings.spiedigitallibrary.org/ on 08/03/2016 Terms of Use: http://spiedigitallibrary.org/ss/TermsOfUse.aspx

Since the prime science instrument (spectrometer) has no field of view and the telescope is effectively a light-bucket, variations in the telescope wavefront error (WFE) over timescales substantially different to the transits can be ignored. At timescales of the durations of the transits (minutes to hours) the FGS/NIR-Phot module is designed such that it can provide basic information about the telescope WFE while in-flight in order to allow decorrelation of the science data for any thermo-elastically caused fluctuations in the PSF output from the telescope.

The main requirement of the FGS is the centroiding performance of 10 milli-arcsec at 10 Hz. The FGS could also be used for focusing the main telescope and support this activity through a dedicated imaging mode. For the best support of the operating modes, several centroiding and data extraction algorithms will be implemented, fully configurable by parameter and command.

In the warm FGS control electronics the data will be processed in real-time. Output data products are reformatted images, centroid coordinates, dimensions and errors in both axes, photometry, glitch count and housekeeping. On-board compression will be used to reduce the telemetry. Additional data processing capabilities include frame stacking for PSF measurements.

A number of calibration steps need to be carried out before the centroiding can be applied, most importantly bias and flatfield correction. For the purpose of glitch detection and correction, several subframes will be buffered.

This system may also be used during the commissioning of the payload to iterate and optimize the telescope focus and spherical aberrations by an iterative loop (with ground control) feeding into the M2 mirror mechanism.

2.6 ARIEL IR Spectrometer (AIRS)

The prime science payload for ARIEL is a broadband, low resolution NIR spectrometer operating between 1.95 μm and 7.8 μm. The IR spectrometer can be split into multiple channels but not at wavelength with key spectral features. This spectrometer is mounted on an Optical Bench hosting also the FGS and the interface to the telescope, amongst which the field of view is shared between different wavelength ranges.

The baseline design foresees two spectrometers with independent optical channels. One over the shorter waveband (1.95–3.9 μm) and the second over the longer waveband (3.9–7.8 μm). The design has evolved considerably since the start of the proposal, with the original grating solution being replaced with a prism [11].

The spectrometer detector (or detectors in the case that the channel is subdivided) is expected to require active cooling, with a nominal operating temperature of ~35 K used to provide the goal performance with the baselined detector. This operating temperature may be relaxed during phase A as a result of further studies.

3. TELESCOPE OPTICAL DESIGN

3.1 Telescope design requirements

The telescope optical layout has been designed in order to provide the optical requirements reported in Table 4. The requirement on the collecting area of 0.6 m^2 implies an entrance pupil of the order of 1 m in diameter. The collecting area is related with the minimum intensity (magnitude) of the observable target.

Table 4. Summary of the telescope optical requirements.

Parameter	Value
Collecting area	>0.6 m^2
FoV	30" with diffraction limited performance 41" with optical quality TBD allowing FGS centroiding 50" unvignetted
WFE	Diffraction limited @ 3 μm (Goal diffraction limited @1.95 μm)
Wavelength range	0.55–8 μm
Throughput	Minimum >0.91 Average >0.96
Output beam dimension	maximum 25 mm (TBC)
Output beam collimation	TBD

Downloaded From: http://proceedings.spiedigitallibrary.org/ on 08/03/2016 Terms of Use: http://spiedigitallibrary.org/ss/TermsOfUse.aspx

The design performance is driven by the requirement that the as-built quality of the telescope system has to be diffraction limited at ≤3 µm over a FoV of 30", i.e. equivalent to an RMS WFE of 220 nm.

To guarantee the required throughput without increasing the size of the primary mirror, that is the entrance pupil of the telescope, the optical design has to be unobscured. The unobstructed solution also assures the energy in the PSF is primarily contained inside the first Airy disk and not spread towards the secondary rings.

The wavelength coverage and the global FoV of the telescope is determined by the requirements on the instruments following the telescope, i.e. the FGS and the AIRS.

3.1.1 Telescope FoV determination

In the determination of the FoV for the telescope, there are three aspects to consider: the FoV required for the FGS, the FoV required for the IR spectrometer (AIRS) and the FoV required for the telescope itself. For each of these not only the nominal scientific FoV has to be taken into account but also the extended FoV needed for accounting for misalignment (alignment pointing error (APE)) or for channel calibration. For example, in the spatial direction of the IR spectrometer an extended FoV is needed for monitoring the background (i.e. zodiacal and thermal background but also detector dark current). FGS has to be able to acquire the source also in the coarse alignment mode, when the feedback with the M4 mirror is not active, which implies a larger FoV for the telescope.

Moreover an additional FoV requirement of 10" is intended to allow for off-movements of the telescope with respect to the instrument optical bench (for example due to launch loads, settling of the structure post-launch and dimensional changes on cool-down).

A 26.4" diffraction limited telescope FoV is required to ensure there is a well resolved PSF at the center of the slit. A larger 37" telescope FoV is required to allow the FGS to acquire a star and center it on the slit. The image quality level over this 37" annulus is TBD but it can be of lower quality, sufficient to allow the star centroid to be well enough resolved to be initially located and then brought to the center of the FGS FoV, where the telescope image quality is better. We refer to this annulus as the 'FGS acquisition' FoV. A still larger telescope FoV, extending to 46", is required to capture the slit background. There are no image quality requirements over this additional FoV; the only real requirement is for the FoV to be unvignetted so that background photons reach the slit. We refer to this annulus as the 'background' FoV.

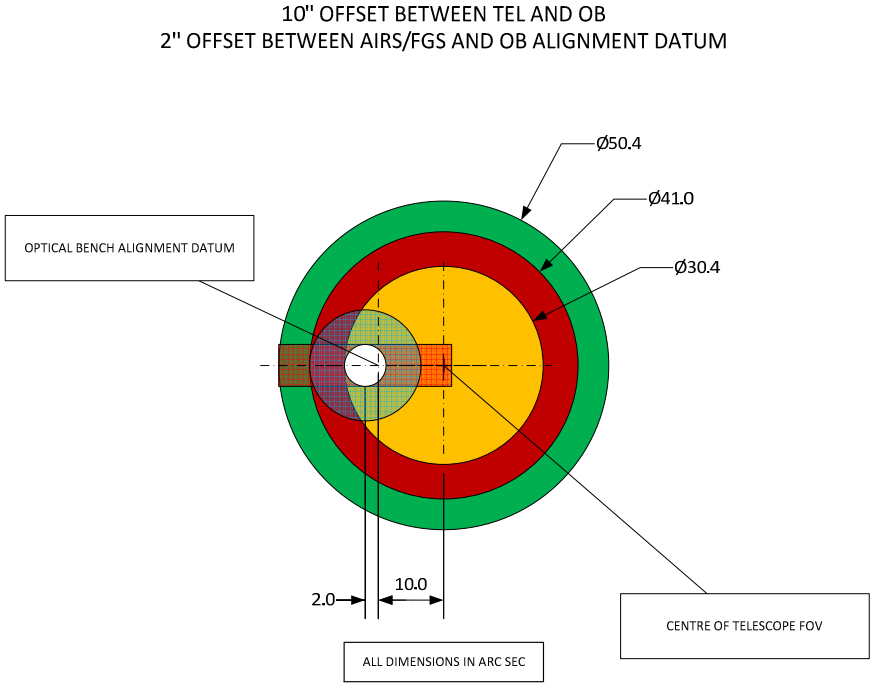

Figure 4. Final telescope FoV. All dimensions are to scale.

Downloaded From: http://proceedings.spiedigitallibrary.org/ on 08/03/2016 Terms of Use: http://spiedigitallibrary.org/ss/TermsOfUse.aspx

However, this situation does not allow any margin for misalignment of the FGS and AIRS. They must be co-aligned to better than ±5" in any case, or else the PSF cannot be located on the center of the slit and in the FGS FoV at the same time. We also need to allow some margin for the fact that the telescope to OB alignment will be set to some datum on the optical bench, and there may be some residual misalignment between that datum and the individual FGS and AIRS instruments. It is reasonable to suppose that these misalignments will be small in comparison to the offset between telescope and OB, given that AIRS and FGS will be integrated on a single optical bench.

For the moment we assume that both the FGS and AIRS will be aligned to a datum on the instrument optical bench (for example an optical reference cube) to within ±2", implying a maximum co-alignment error between the two them of 4". We then assume that this reference cube is the datum to which the telescope is aligned. This implies that we must add a 4" margin on all of the telescope FoVs to allow for these alignment errors. This gives the final telescope FoVs shown in Figure 4 and summarized in Table 5.

Table 5. Summary of FoV requirements. Telescope FoV values are rounded to the nearest arcsec.

Designation	**FoV (arcsec)**
AIRS	6.4 x 26.4
FGS	17
Telescope: Diffraction limited	30
Telescope: FGS acquisition	41
Telescope: Background	50

3.2 Telescope design characteristics

The baseline telescope design is an afocal unobscured off-axis Cassegrain telescope (M1 and M2) with a recollimating off-axis parabolic tertiary mirror (M3) (see Figure 5).

Note that the optical reference system (shown in Figure 5) is different from the S/C one. The telescope is accommodated horizontally with its optical axis (Z) along the S/C X axis.

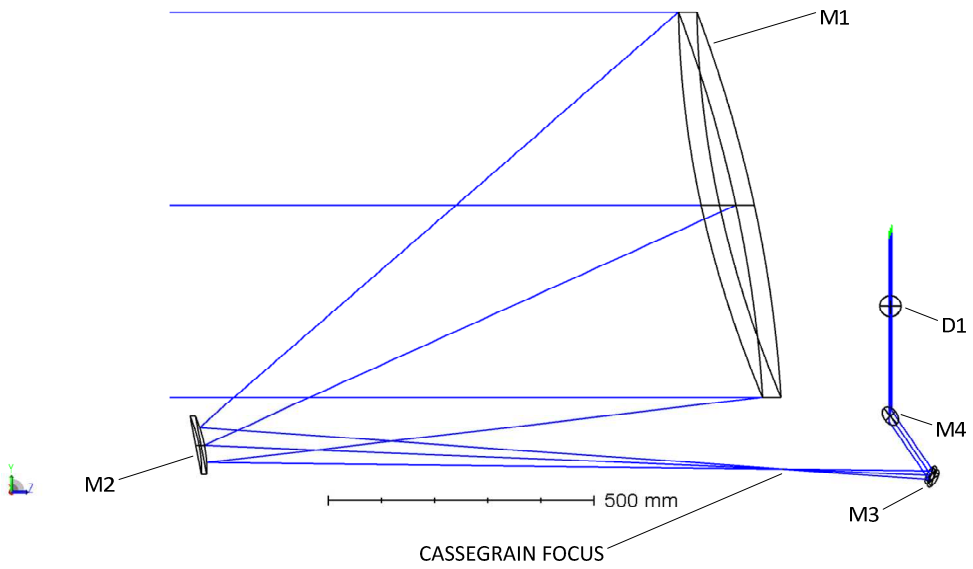

Figure 5. Scale drawing of the telescope – view in Y-Z plane.

The system aperture stop/entrance aperture is located at the M1 surface. M1 aperture is an ellipse with major axis dimensions of 1100 mm x 730 mm. The complete characteristics of the optical design are summarized in Table 6.

Downloaded From: http://proceedings.spiedigitallibrary.org/ on 08/03/2016 Terms of Use: http://spiedigitallibrary.org/ss/TermsOfUse.aspx

Table 6. Summary of the telescope optical design characteristics.

Parameter	Values
Optical concept	Off-axis Cassegrain plus off-axis parabolic mirror Afocal design
Focal length	12.1 m
Pupil size	Ellipse with major axis 1.1 m x 0.73 m
Focal ratio	11 (or 16.5)
Angular magnification	-43
Scale @ telescope focus	58 µm/"

In Table 7 the description of the parameters (radius of curvature, conic constant, off-axis, etc) of the telescope mirrors are described.

Table 7. Summary of the telescope optical parameters.

Optical element	R (mm)	k	Off-axis (mm)	Clear Aperture Radius (mm)	Type
M1	-2307.450	-1	500 (y)	Elliptical, 550 (x) by 365 (y)	Concave mirror
M2	-229.381	-1.4676	45 (y)	55	Convex mirror
M3	-402.000	-1	250 (x&y)	17	Concave mirror

3.3 Telescope optical performance

The raytracing analysis and design optimization have been done by means of the raytracing software Zemax®. To assess the quality of the telescope and determine the optical performance, since the telescope is afocal, the spot diagrams can be given using an ideal focalising paraxial lens with an on purpose focal length, or using the afocal image space option appropriate for systems with collimated output. The spot diagrams obtained with this second method are reported in Figure 6; note that units in this case are radiants. In the figure, the spot diagrams calculated over a FoV of 37", corresponding to the nominal 'FGS acquisition FoV', are compared with the Airy disk diameter calculated at a wavelength of 3 µm, i.e. 0.37 mrad.

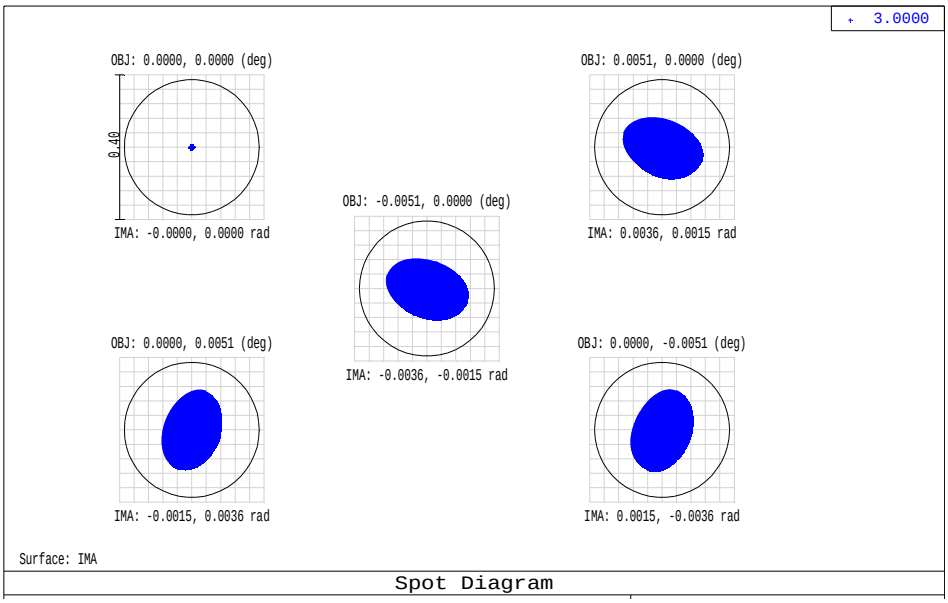

Figure 6. Spot diagrams for the telescope in afocal image space (units are mrad). The spot diagrams are compared with the Airy disk calculated at the nominal telescope diffraction limited wavelength of 3 µm.

Downloaded From: http://proceedings.spiedigitallibrary.org/ on 08/03/2016 Terms of Use: http://spiedigitallibrary.org/ss/TermsOfUse.aspx

In Figure 7a and Figure 7b telescope performance in the collimated space leading to the FGS and IR spectrometer is shown respectively in terms of the Strehl ratio and RMS WFE error over the 37 arcsec field of view for the wavelength of 3.9 µm.

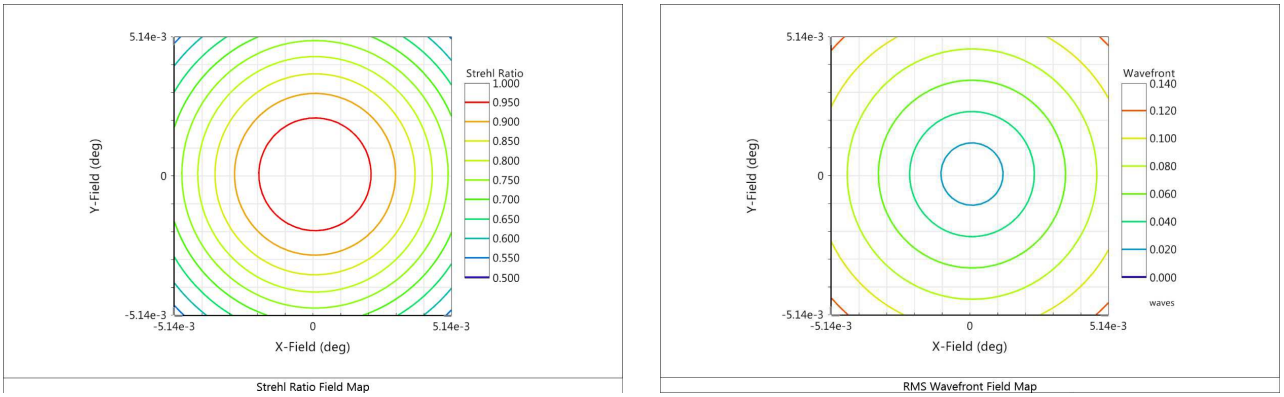

(a) (b)

Figure 7.Telescope Strehl ratio (a) and telescope RMS WFE (b) calculated over a 37 arcsec square field of view for a wavelength of 3.9 µm.

A new telescope design is currently under investigation in order to improve the image quality at the edge of the FoV and thus to allow for more margins in the telescope tolerance budget.

4. TELESCOPE THERMAL CONTROL

The telescope is passively cooled to ≤70 K and thermal control is based on a passive/active approach. A preliminary telescope mechanical configuration and a high level scheme of the telescope assembly are shown respectively in Figure 8a and Figure 8b.

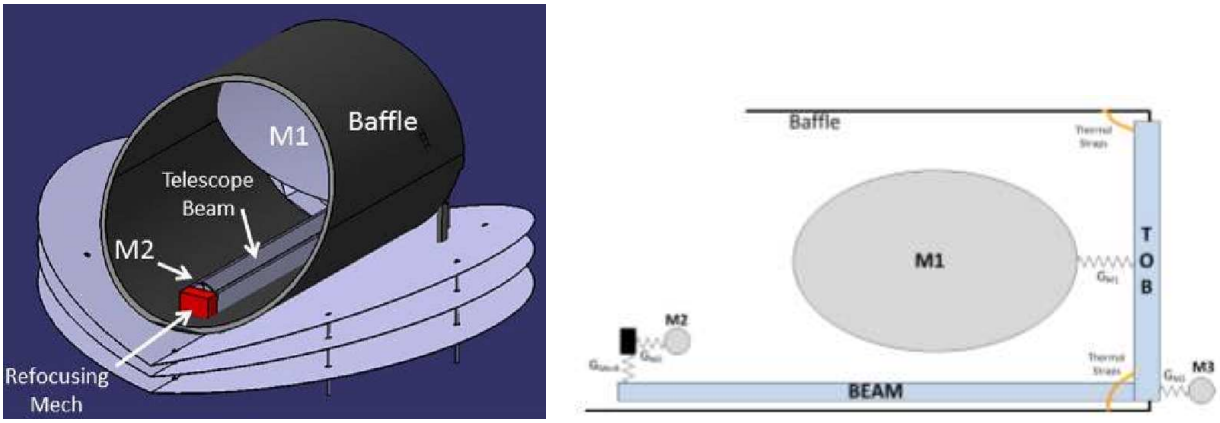

(a) (b)

Figure 8. (a) ARIEL telescope mechanical configuration. (b) Simple scheme of the Telescope Assembly thermal configuration.

The telescope baffle provides a large radiator area with a good view to deep space; this gives sufficient radiative cooling to dump the parasitic loads from the PLM support struts, cryo-harnesses and radiative load from the final VG. Temperature control of the mirrors is achieved by partial thermal decoupling from PLM units: each mirror is mounted on its supporting structure by insulating struts with a total conductance of less than 0.01 W/K. This configuration will help in filtering out all potential instabilities with periods of the order of 10–100 s originated in the PLM.

For the primary mirror, the high thermal capacitance, due to its mass, will allow a higher level of passive filtering, damping instabilities at lower frequencies (with periods of the order of few hours). The slower fluctuations (with periods

Downloaded From: http://proceedings.spiedigitallibrary.org/ on 08/03/2016 Terms of Use: http://spiedigitallibrary.org/ss/TermsOfUse.aspx

of the order of several hours or longer) that could be transmitted to the optics will be smoothed by the active control system.

The telescope will also incorporate contamination control heaters on the M1 and M2 mirrors and on the PLM optical bench. These heaters will be active during the early orbit operations to ensure that the sensitive optical surfaces remain warmer than the support structure through the critical parts of cooldown. A temperature delta of ~40 K will be maintained between the baffle (which will act as a contamination getter for water and other contaminants being off-gassed by the PLM) and the optical surfaces. An initial calculation of the power required to maintain this temperature gradient shows that approximately 100 W of heater power is required during this phase. This would hold the sensitive surfaces at 200 K while the baffle cools below 160 K where the H_2O will freeze out. The telescope decontamination process and hardware will be part of the S/C thermal control (TBC).

5. TELESCOPE CONTROL UNIT

The telescope and optical bench operating temperatures, as well as those of some subsystems, will be monitored and fine tuned/stabilized mainly by means of the thermal control subsystem Telescope Control Unit (TCU) working in feedback closed-loop and hosted by the main Payload electronics unit, i.e. the Instrument Control Unit (ICU) [12].

The ICU baseline electrical architecture foresees four electronics boards, as illustrated in Figure 9.

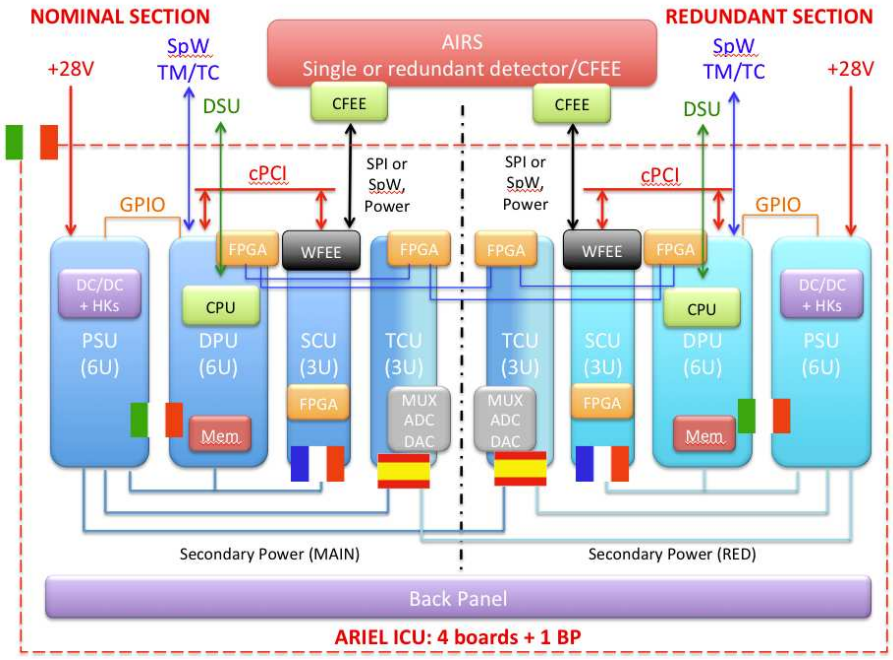

Figure 9. ICU baseline electrical architecture showing the main present national responsibilities.

In order to accomplish the TCU requirements, the board hosts the PLM thermal monitoring logic, the thermal control logic and the drivers of: M2 refocusing mechanism, M4 tip/tilt mechanism and IR calibration lamp. It will also host a power stage to feed all subsystems, a communication link to ICU's DPU and a feedback loop control from FGS for M4 driver logic (as shown in Figure 10).

For the thermal monitoring of the PLM, 50 thermistors will be powered by a stable current source and readout one by one with an ADC by means of a multiplexing stage. The redundant thermistors will be read by the redundant TCU board in order to reduce cross-strapping. The relevant thermal data will be sent to ICU's DPU for housekeeping telemetry, through the communication link.

The thermal control of the Temperature Control Stage (TCS) subsystems (which are placed between critical detectors/mirrors and their thermal sink) will be carried out by monitoring their temperature, as explained previously, and activating their heaters once the correction has been calculated by the FPGA logic (a PID control loop). The heaters

Downloaded From: http://proceedings.spiedigitallibrary.org/ on 08/03/2016 Terms of Use: http://spiedigitallibrary.org/ss/TermsOfUse.aspx

power will be supplied by its driver stage with a Pulse Width Modulator (PWM), if the power budget from ICUs permits it.

The M2 and M4 mechanisms and IR lamp are in an early stage of development. Each one will be controlled by the FPGA dedicated logic and powered by its driver stage, assuming that the power budget from ICU is enough. It is not foreseen any feedback loop for these subsystems except for M4. It requires data from FGS in order to operate, which will come through the ICU's DPU, using a proper communication link.

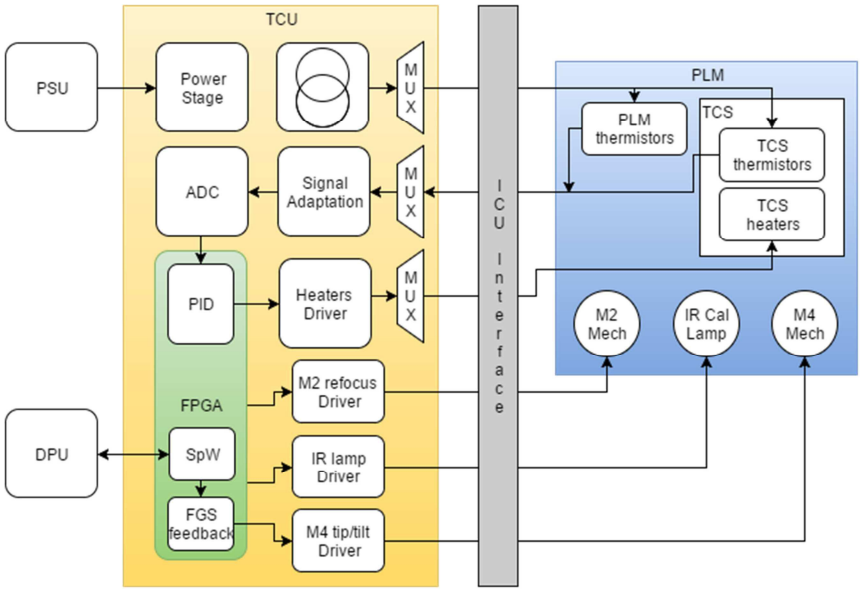

Figure 10. TCU baseline electrical architecture.

6. CONCLUSIONS

In this paper the main characteristics of the ARIEL telescope have been presented. An introduction on the mission design and goals has been given together with a description of the various elements composing the spacecraft and payload.

The afocal telescope layout solution has been described and the different requirements and characteristics have been discussed. In particular the requirements on the FoV of the telescope related to the spectrometer and field guidance channels have been illustrated in detail.

The theoretical performance of the baseline telescope layout, an off-axis Cassegrain plus a collimating off-axis paraboloidal mirror, has been shown.

A preliminary study on the passive/active thermal control of the instrument has been given. The telescope is passively cooled at an operating temperature less than 70 K.

The Instrument Control Unit (ICU) baseline electrical architecture together with that of the Telescope Control Unit (TCU) have been described. The optical bench operating temperatures, as well as those of some subsystems, will be monitored and fine tuned/stabilized mainly by means of the thermal control subsystem working in feedback closed-loop.

ACKNOWLEDGMENTS

This activity has been realized under the Agenzia Spaziale Italiana (ASI) contract to the Istituto Nazionale di Astrofisica (INAF) (ARIEL 2015-038-R.0).

Downloaded From: http://proceedings.spiedigitallibrary.org/ on 08/03/2016 Terms of Use: http://spiedigitallibrary.org/ss/TermsOfUse.aspx

REFERENCES

[1] Puig, L., Pilbratt, G. L., Heske, A., Escudero Sanz, I., and Crouze, P.-E., "ESA M4 mission candidate ARIEL", to be published in Proc. SPIE 9904 (this volume), 9904-62, (2016).

[2] Tinetti, G., et al., "The science of ARIEL (Atmospheric Remote-sensing Infrared Exoplanet Large-survey)", to be published in Proc. SPIE 9904 (this volume), 9904-63, (2016).

[3] ARIEL SST, "ARIEL Science Requirements Document", ESA-ARIEL-EST-SCI-RS-001, (2015).

[4] EChO Study Science Team, "The Echo Design Reference Mission", ECHO-SRE-SA-PHASEA-010, (2013).

[5] Ricker, G. R., et al., "The Transiting Exoplanet Survey Satellite (TESS): discovering exoplanets in the solar neighborhood", to be published in Proc. SPIE 9904 (this volume), 9904-77, (2016).

[6] Fortier, A., et al., "CHEOPS: a space telescope for ultra-high precision photometry of exoplanet transits", Proc. SPIE 9143, 91432J (2014).

[7] Ragazzoni, R., et al., "PLATO: a multiple telescope spacecraft for exo-planets hunting", to be published in Proc. SPIE 9904 (this volume), 9904-73, (2016).

[8] Eccleston, P., et al., "An integrated payload design for the Atmospheric Remote-sensing Infrared Exoplanet Large-survey (ARIEL)", to be published in Proc. SPIE 9904 (this volume), 9904-106, (2016).

[9] Wright, G. S., et al., "The Mid-Infrared Instrument for JWST, II: Design and Build", Publications of the Astronomical Society of Pacific 127 (953), 595-611 (2015).

[10] Collaudin, B., and Passvogel, T., "FIRST/Planck mission cryogenic systems: current status", Proc. SPIE 3356, Space Telescopes and Instruments V, 1114 (1998).

[11] Amiaux, J., "AIRS optical design trade-off analysis", ARIEL-CEA-INST-DD-001, (2016).

[12] Focardi, M., et al., "The Atmospheric Remote-sensing Infrared Exoplanets Large-survey (ARIEL) payload electronic subsystems", to be published in Proc. SPIE 9904 (this volume), 9904-109, (2016).

Downloaded From: http://proceedings.spiedigitallibrary.org/ on 08/03/2016 Terms of Use: http://spiedigitallibrary.org/ss/TermsOfUse.aspx