Astronomical Data Analysis Software and Systems XXVI
ASP Conference Series, Vol. 521
Marco Molinaro, Keith Shortridge, and Fabio Pasian, eds.
© 2017 Astronomical Society of the Pacific

A PLC Distributed Layout: the Case of the Instrument Control Electronics of ESPRESSO

V. Baldini,[1] G. Calderone,[1] R. Cirami,[1] I. Coretti,[1] S. Cristiani,[1]
P. Di Marcantonio,[1] D. Mégevand,[2] and M. Riva[3]

[1]*INAF - Osservatorio Astronomico di Trieste, Trieste, Italy*
baldini@oats.inaf.it

[2]*Observatoire Astronomique de l'Université de Genève, Versoix, Switzerland*

[3]*INAF - Osservatorio Astronomico di Brera, Merate, Italy*

Abstract. ESPRESSO, the Echelle SPectrograph for Rocky Exoplanet and Stable Spectroscopic Observations of the European Southern Observatory (ESO) is passing the integration phase in Geneva before being shipped to Chile and installed at the Very Large Telescope (VLT) site on the Cerro Paranal. It is going to be one of the first permanent instruments of VLT with a distributed control electronics based on Beckhoff PLCs. About 40 motorized stages, more than 90 sensors and several calibration lamps are controlled by the Instrument Control Electronics (ICE) and Software (ICS). All the ESPRESSO functionalities are managed by two main CPUs that Sshare the workload. The Beckhoff EtherCAT decentralization modules ensure the EtherCAT continuity between the 7 PLC electronics subracks placed in different cabinets, allowing optimal distributed architecture. Furthermore, one of the two CPUs is equipped with an IEEE 1588 protocol interface, used for the time synchronization of the distributed clocks in the networks. In this paper the features of the CPUs used, the distribution of functions among them, the electronic cabinets configuration and a detailed overview of the PLC control system used are presented.

1. Introduction

ESPRESSO is the echelle spectrograph built for detecting rocky exoplanets and performing stable spectroscopic observations that is going to be installed at the ESO - VLT site in Chile (Mégevand et al. (2012)). The main scientific drivers for this istrument are:

- the measurement of high precision radial velocities of solar type stars for searching for rocky planets
- the measurement of the variation of the physical constants
- the analysis of the chemical composition of stars in nearby galaxies

These science cases require an efficient, high-resolution, extremely stable and accurate spectrograph. ESPRESSO is going to be installed in the Coudé Combined Laboratory (CCL) of the VLT and will collect the light via a Coudé Train optical system (one for each UT) of up to four telescopes. Inside the CCL, four Front-End (F/E) units are in charge of combining the light coming from the telescope(s) and to feed it into the

spectrograph fibers. Each of the F/E four arms is composed by an Atmospheric Dispersion Corrector (ADC), a focus translational stage and a system that performs the field and pupil stabilization (composed in turn by a set of piezo tip-tilt stages for performing the corrections, a technical CCD (TCCD) and a neutral filter). The F/E provides also a mode selector mounted on a rotary stage whose task is to feed the spectrograph fibers with the light coming from the selected telescopes. Two fibers feed the spectrograph simultaneously: the target fiber and the sky/calibration fiber. The ESPRESSO Calibration Unit is composed of the traditional Thorium-Argon calibration sources and a Laser Driven Light Source (LDLS). Moreover, the use of a Laser Frequency Comb (LFC) is foreseen, which will provide high resolution repeatable calibrations. The two-arm (red and blue) echelle spectrograph, placed inside a thermal enclosure and a vacuum vessel, has a fixed optical layout, with no foreseen moving parts in order to maximize the stability and repeatability of the instrument performances. Two scientific detectors are foreseen for this instrument: one for the red arm and one for the blue one, controlled by two ESO Next Generation Controllers (NGCs). An exposure meter may possibly measure the flux entering the spectrograph as a function of time.

2. The hardware point of view: ESPRESSO electronics cabinets distribution.

The ESPRESSO control electronics (Baldini et al. (2015)) consists of 9 electronics cabinets (see Figure 1) that host all the electrical devices including the control system, based on Beckhoff PLCs.

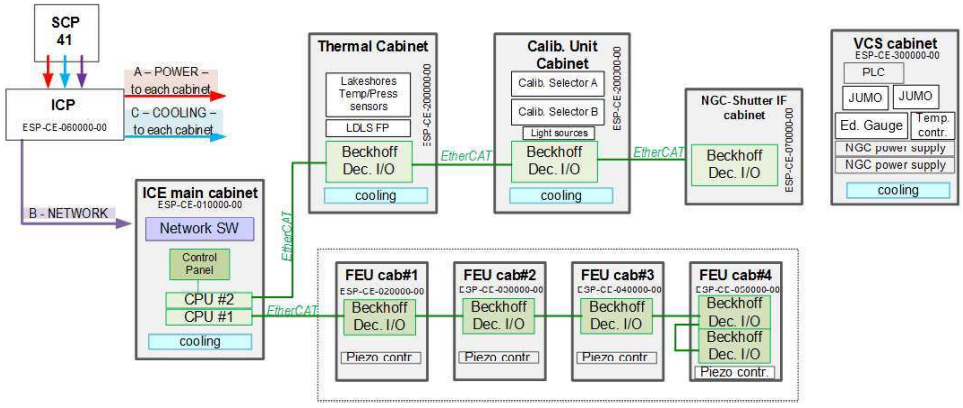

Figure 1. Electronics cabinets overview

The ESPRESSO PLC CPUs are hosted in the main ICE cabinet that is placed in the CCL. In the same place the Thermal Control Cabinet, Calibration Unit Cabinet, Vacuum Cryo Control Cabinet and Fabry Pèrot calibration light source are hosted. These cabinets, of Schroff Varistar LHX3 type, are 2000 mm high, 800 mm deep and 600 mm wide. This variant includes a radial fan and heat exchanger and provides an optimum airflow for cooling of the equipment. The four Front End Unit Cabinets are 1200 mm high and are placed near each FEU arm. All the cabinets are mounted on a special custom made damper feet to reduce the effects of earthquakes, which frequently hit Chile. All the PLC CPUs and modules are mounted in 19 inches sub-racks. Due to the same mechanical composition of each of the four FEU arms, the FEU electronics cabinets are

identical (containing, in addition to the PLC modules, also the piezo tip-tilt controllers) except for the fourth one. This cabinet hosts also an additional 19 inches sub-rack with the PLC modules for the control of the exposure meter stage and sensors and the mode selector rotary stage. In the main cabinet, besides the CPU sub-racks, the shutters drivers, a 12 inches touch panel, a SELCO control alarm annunciator and the network switch will also be hosted. ICE duties are to provide the network and the power supply to each cabinet. Moreover, the EtherCAT link allows the communication between the CPUs, configured and programmed by ICE, and the decentralized Beckhoff modules placed in the different cabinets.

3. PLC technology and distribution of the workload between the CPUs

The PLC approach is completely different from that of the VLT instruments of first and second generation, which are based on VME technology. One of the main points in the adoption of PLCs is to have a system built on *Commercial Off The Shelf* (COTS) components, leaving in this way the maintenance of the boards and driver code to the vendor. The CPU series chosen to control all the ESPRESSO devices is the Beckhoff

Technical data	CX2030
Processor	Intel® Core™ i7 2610UE 1.5 GHz, 2 cores (TC3: 60)
Flash memory	4 or 8 GB CFast flash card (optionally expandable)
Internal main memory	2 GB DDR3 RAM
Persistent memory	128 KB NOVRAM integrated
Interfaces	2 x RJ45, 10/100/1000 Mbit/s, DVI-I, 4 x USB 2.0, 1 x optional interface
Diagnostics LED	1 x power, 1 x TC status, 1 x flash access, 2 x bus status
Clock	internal battery-backed clock for time and date (battery exchangeable)
Operating system	Microsoft Windows Embedded Compact 7 or Microsoft Windows Embedded Standard 7 P
Control software	TwinCAT 2 PLC runtime, NC PTP runtime, NC I runtime
I/O connection	via power supply module (E-bus or K-bus, automatic recognition)
Power supply	24 V DC (-15 %/+20 %)
Max. power loss	20 W (including the system interfaces)
Dimensions (W x H x D)	144 mm x 100 mm x 91 mm
Weight	approx. 1165 g
Operating/storage temperature	-25…+60 °C/-40…+85 °C
Relative humidity	95 %, no condensation
Vibration/shock resistance	conforms to EN 60068-2-6/EN 60068-2-27
EMC immunity/emission	conforms to EN 61000-6-2/EN 61000-6-4
Protection class	IP 20

Figure 2. Main features of the ESPRESSO CPUs

CX2030, based on Intel processor 1,5 GHz dual core. Figure 2 shows the CPU main features. In ESPRESSO the workload is divided between two CX2030 CPUs, both installed in the main cabinet. Figure 3 shows in detail the functions distribution between the two CPUs. The first CPU purpose is to control all the FEU related functions, including the mode selector stage, while the second one manages the Thermal Control System, the Calibration Unit functions and the interface with the NGCs. The EK1100 modules allow the EtherCAT bus continuity between the Beckhoff decentralized sub-racks. CPU#1 performs the PID control of two linear stages, one filter wheel and two ADCs for each of the four FEU arms. Real time computations of the position trajectory are performed for the eight ADC tracking motors, and the position and velocity control loop are corrected at every PLC cycle time. The workload of CPU#1 is, in this way, around 40%, to compared with less than 20% of CPU#2 that does not need to

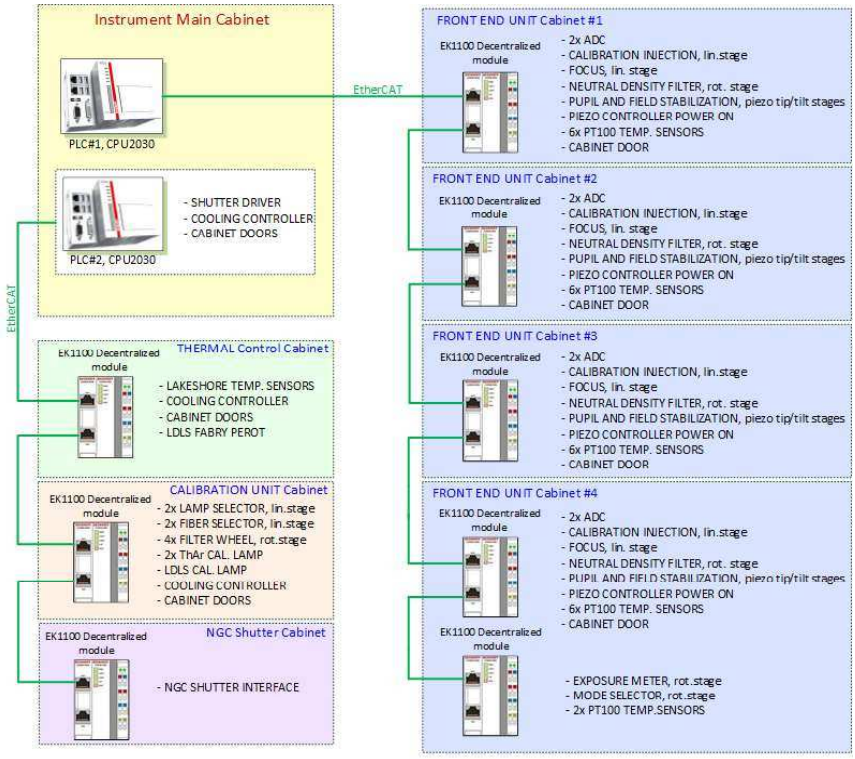

Figure 3. Functions distribution between the two ESPRESSO CPUs

perform trajectory computation on the motors controlled. To allow a precise tracking of the ADCs the CPU#1 is equipped with the EL6688 Beckhoff module. This module provides the external time synchronization interface through the IEEE 1588 protocol. The communication between the PLC and the higher level Instrument Control Software (ICS) is done via OPC-UA server, installed on the PLCs (Cirami et al. (2013)).

References

Baldini, V., et al. 2015, ICALEPCS2015, 689
Cirami, R., et al. 2013, ICALEPCS2013, 70
Mégevand, D., et al. 2012, in Ground-based and Airborne Instrumentation for Astronomy IV, vol. 8446 of SPIE Conf. Ser., 84461R