PROCEEDINGS OF SPIE

SPIEDigitalLibrary.org/conference-proceedings-of-spie

The design of the local monitor and control system of SKA dishes

Schillirò, F., Baldini, V., Becciani, U., Cirami, R., Costa, A., et al.

F. Schillirò, V. Baldini, U. Becciani, R. Cirami, A. Costa, A. Ingallinera, A. Marassi, G. Nicotra, C. Nocita, S. Riggi, C. Trigilio, "The design of the local monitor and control system of SKA dishes," Proc. SPIE 9906, Ground-based and Airborne Telescopes VI, 99065V (9 August 2016); doi: 10.1117/12.2232567

SPIE.

Event: SPIE Astronomical Telescopes + Instrumentation, 2016, Edinburgh, United Kingdom

Downloaded From: https://www.spiedigitallibrary.org/conference-proceedings-of-spie on 07 Apr 2020 Terms of Use: https://www.spiedigitallibrary.org/terms-of-use

The design of the local monitor and control system of SKA dishes

F. Schillirò*[a], V. Baldini[b], U. Becciani[a], R. Cirami[b], A. Costa[a], A. Ingallinera[a], A. Marassi[b], G. Nicotra[c], C. Nocita[c], S. Riggi[a], C. Trigilio[a]
[a]INAF - Osservatorio Astrofisico di Catania, Via S.Sofia 78, 95123 Catania, Italy,
[b]INAF - Osservatorio Astronomico di Trieste, Via G.B. Tiepolo 11, 34143 Trieste, Italy
[c]INAF - Istituto di Radioastronomia, Via P. Gobetti 101, 40129 Bologna, Italy;

ABSTRACT

The Square Kilometer Array (SKA) project aims at building the world's largest radio observatory to observe the sky with unprecedented sensitivity and collecting area. In the first phase of the project (SKA1), an array of dishes, SKA1-MID, will be built in South Africa. It will consist of 133 15m-dishes, which will include the MeerKAT array, for the 0.350-20 GHz frequency band observations.
Each antenna will be provided with a local monitor and control system (LMC), enabling operations both to the Telescope Manager remote system, and to the engineers and maintenance staff; it provides different environment for the telescope control (positioning, pointing, observational bands), metadata collection for monitoring and database storaging, operational modes and functional states management for all the telescope capabilities.
In this paper we present the LMC software architecture designed for the detailed design phase (DD), where we describe functional and physical interfaces with monitored and controlled sub-elements, and highlight the data flow between each LMC modules and its sub-element controllers from one side, and Telescope Manager on the other side.
We also describe the complete Product Breakdown Structure (PBS) created in order to optimize resources allocation in terms of calculus and memory, able to perform required task for each element according to the proper requirements. Among them, time response and system reliability are the most important, considering the complexity of SKA dish network and its isolated placement.
Performances obtained by software implementation using TANGO framework will be discussed, matching them with technical requirements derived by SKA science drivers.

Keywords: SKA, LMC, Dish, TANGO.

1. INTRODUCTION

The Square Kilometer Array (SKA) [1] aims to be the biggest array of radio-telescopes of the world. It will be installed between South Africa's Karoo region and the Western Australia's Murchison region (MRO), incorporating the MEERKAT [2] and ASKAP [3] precursor telescopes. The unprecedented sensitivity of thousands of individual radio receivers will give astronomers, through the frequency range from 50 MHz to 20 GHz, insights into the formation and evolution of the first stars and galaxies after the Big Bang, the role of cosmic magnetism, the nature of gravity, and possibly even life beyond Earth. Three different arrays are foreseen to fulfill these scientific goals: SKA1-MID, composed by 190 dish antennas observing in the 0.35-13.8 GHz domain installed in South Africa, SKA1-Survey array hosting 60 dishes equipped with phased array feeds (PAFs), and the SKA1-Low, hosting 250000 low-frequency antennas, both installed at the MRO site.
Dish Local Monitor and Control System (LMC) is the subsystem for each dish antenna that deals with the management, monitoring and control of the operation between the DISH element and the Telescope Manager (TM) remote system on one side and the sub-element controller on the other side. The following sections are focused on the SKA1-MID Dish LMC status description.

fschilliro@oact.inaf.it; +390957332231;

Ground-based and Airborne Telescopes VI, edited by Helen J. Hall, Roberto Gilmozzi, Heather K. Marshall,
Proc. of SPIE Vol. 9906, 99065V · © 2016 SPIE · CCC code: 0277-786X/16/$18 · doi: 10.1117/12.2232567

Downloaded From: https://www.spiedigitallibrary.org/conference-proceedings-of-spie on 07 Apr 2020
Terms of Use: https://www.spiedigitallibrary.org/terms-of-use

2. SKA1 - MID DISH ARCHITECTURE

SKA-MID1 Dish arrays are composed of 15-m Gregorian offset antennas with a feed-down configuration equipped with wide-band single pixel feeds (SPFs) for the bands 1 (0.35-1.05 GHz), 2 (0.95-1.76 GHz) and 5 (4.6-13.8 GHz) of SKA frequency.
Besides the LMC, each dish is composed of other three main sub-elements:

- Dish Structure (DS) responsible for the design of the antenna mechanical structure, optics, reflectors and indexer, for the power distribution to all the sub-element, the safety system and the Antenna Control Unit (ACU)
- Single-Pixel Feed (SPF) provides the feed packages of the antenna and relative control equipment, included LNAs, orthomode transducers (OMTs) and helium cooling system. A single controller placed in the pedestal allows external monitoring and control operation performed by the LMC
- Receiver (Rx) provides the hardware equipment to digitize the RF signal received from each SPF band after a RF-to-optical conversion performed at the indexer. The digitiser packetizes and transmits the signal over a high-speed Ethernet link to the central signal processor. A central controller is present to monitor and control the subelement and interface to the LMC.

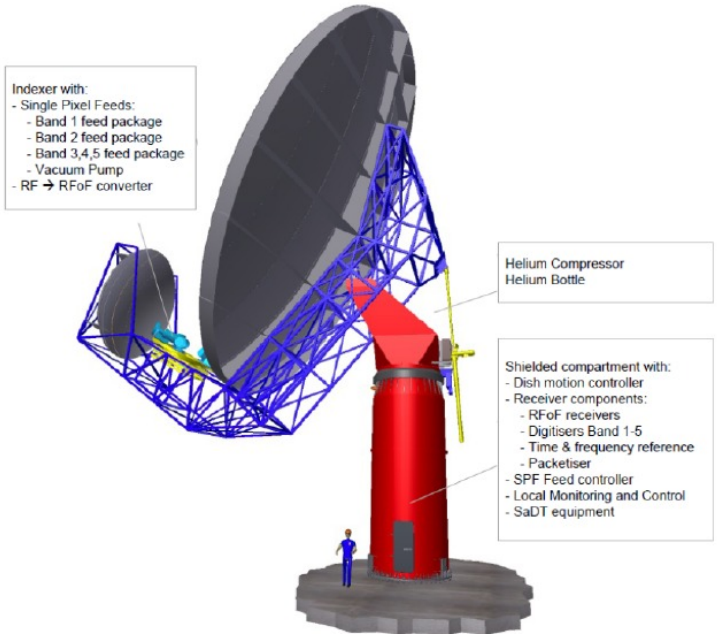

Figure 1 SKA dish subsystems overview

3. LMC GENERAL OVERVIEW

The Local Monitoring and Control (LMC) is the central control and monitoring hub of the antenna [4]. It communicates with the subsystem controllers in order to command and monitor the antenna behavior.
For the first phase of SKA, 10^5 monitoring points are foreseen: for SKA1-Mid each antenna contributes with few hundreds parameters.
The LMC consists of a commercial off the shelf controller that serves as a single point of entry for all control and monitoring signals to the outside. The LMC allows a drill-down capability for maintainers to access detailed diagnostic information of sub-elements on request. LMC also has storage capabilities for saving data for diagnostic in case of system failures.
In particular the following list represents the LMC functional breakdown:

- Managing the interface with the Telescope Manager
- Configuring all the components of the Dish in preparation for an observation

Downloaded From: https://www.spiedigitallibrary.org/conference-proceedings-of-spie on 07 Apr 2020
Terms of Use: https://www.spiedigitallibrary.org/terms-of-use

- Control of the Dish pointing during an observation
- Monitoring of all dish components and reporting information to the TM
- Sending to the TM the meta-data required for the processing of signals
- Providing functionality for the remote support of the dish and all its sub-elements
- Managing equipment safety

Figure 2 shows the subsystem physical connection. This connection is realized by an Ethernet link with a network switch provided by SaDT which, in turn, is connected with the TM and other sub-element controllers. This enables the communication of LMC with sub-elements and TM at an expected data rate of 210 kbps.

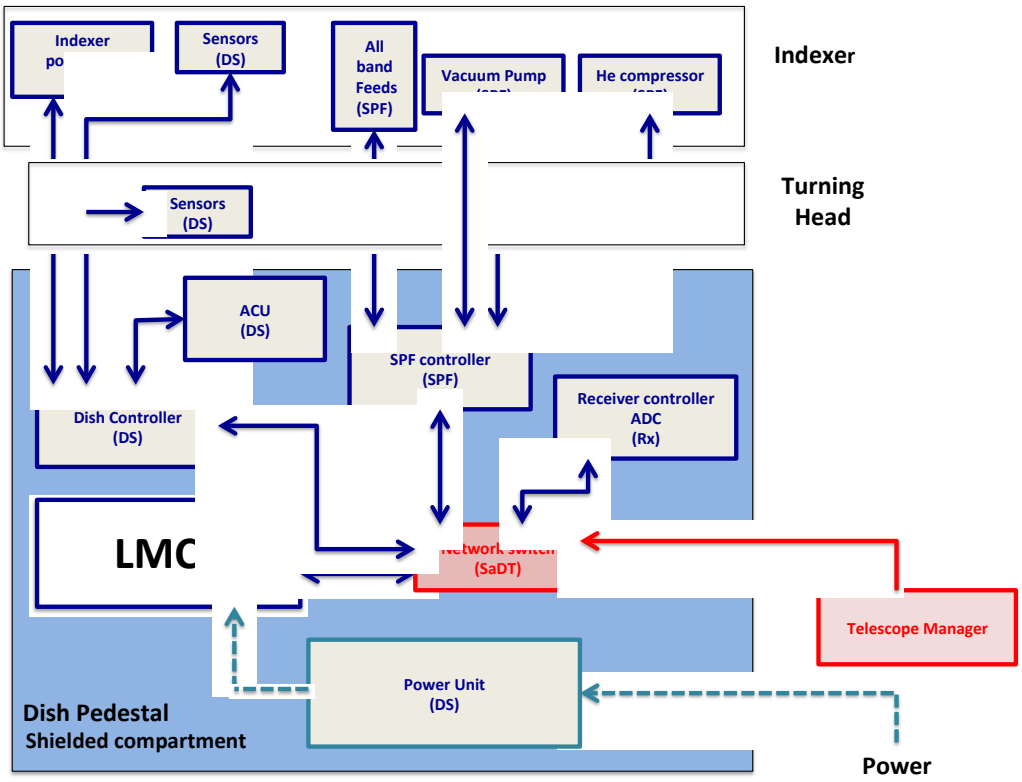

Figure 2 Physical overview for SKA-MID. Blue boxes and lines refer to internal elements and physical connections for monitor and control; red boxes and lines refer to external elements and their physical connections; green boxes and dashed lines refer to power links

3.1 Expected data flow

A good estimation of the expected data rate is possible on the basis of the previous experience with MeerKAT project. Figure 2 summarizes the number of sensors monitored for each subsystem, with the update periods and the throughput.

Downloaded From: https://www.spiedigitallibrary.org/conference-proceedings-of-spie on 07 Apr 2020
Terms of Use: https://www.spiedigitallibrary.org/terms-of-use

TM_DSH data rate calculation: SKA_MID Dish

		Number of sensors	update period	Bytes per sample	Throughput (kbps)	Comments
Dish Structure	Monitor slow	150	1	10	12	
	Monitor fast	5	0,1	10	4	
	Pointing measured	2	0,1	10	1,6	time stamped pointing estimates (az/el + tilt) once every 100ms
	Control	5	0,1	10	4	time stamped pointing control polinomial once every 100ms
SPFs (Band 1-5)	Monitor slow	500	1	10	40	
	Monitor fast	5	0,1	10	4	
Receiver	montior slow	200	1	10	16	
	monitor fast	5	0,1	10	4	

			Proposed specs
Total	**Monitor**	**81,6** kbps	**200** kpbs
	Control	**4** kbps	**10** kpbs

Notes: These numbers are based on the MeerKAT experience.

Figure 3 Estimated data rate for SKA_Mid Dish/Receiver LMC

4. LMC SOFTWARE ARCHITECTURE

4.1 LMC architecture overview

A high-level view of the LMC software components is given by the Product Breakdown Structure (PBS), organized in the logical packages reported in Figure .

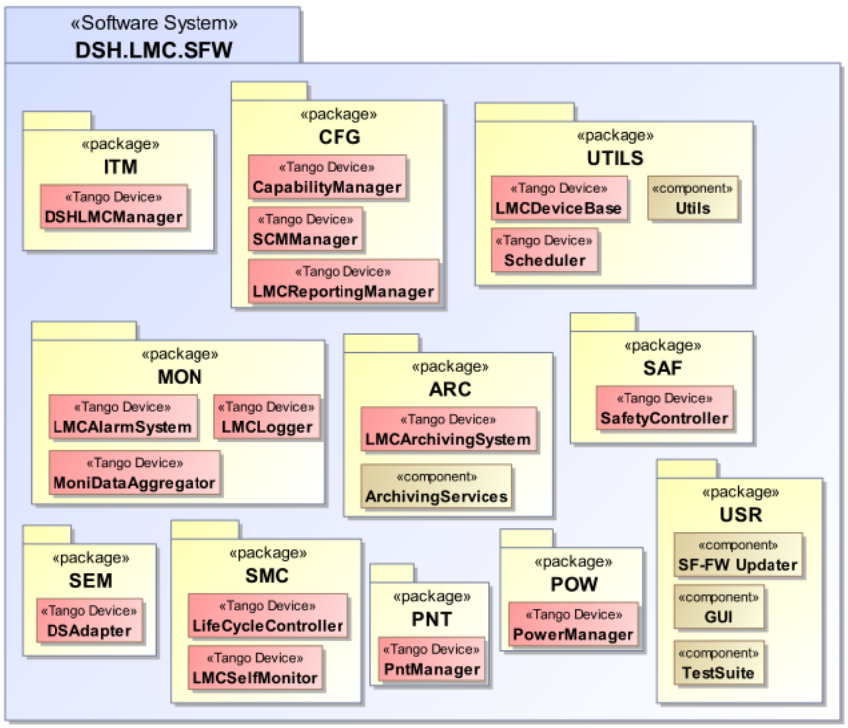

Figure 4 LMC software PBS

Downloaded From: https://www.spiedigitallibrary.org/conference-proceedings-of-spie on 07 Apr 2020
Terms of Use: https://www.spiedigitallibrary.org/terms-of-use

The software packages are described below:

- Sub-Element Manager (SEM) package contains components responsible for implementing communication with dish controllers, providing commands to control sub-element systems and receiving monitoring data, events and alarms from sub-element systems. It also provides a stream of monitoring data/events/alarms towards other LMC packages higher in the functional hierarchy.
- ITM is the Interface to Telescope Manager and its duties are performed mainly by the DSHLMCManager module.
- Self-Monitor and Control package (SMC) monitors and controls the LMC hardware and software components, and reports monitoring information and faults to the MON package.
- The CFG module is the Configuration Manager that contains components responsible to configure monitoring information reporting (i.e. level, drill-down), identify capabilities and availability of capabilities, performs mapping of sub-element operating states and modes to external state model, derives global states from sub-system states and configures the capabilities. It receives a list of missing and in-maintenance components from TM and persists this list beyond a power down-up cycle.
- MON is the Monitoring and Logging package responsible to collect monitoring data (including self-monitoring data) and process alarms, logs and events detected in the sub-elements.
- UTILS is responsible to implement utility or common LMC functionalities beyond what it is currently provided by the Tango Control Framework (utility functions, device dynamic configuration, device alarms and custom events, common commands and attributes, Tango device group).
- PNT (Pointing Control) is the package responsible for executing the pointing operations of the antenna. Through PNT is it possible to acquire the telescope model and parameters for static and dynamic pointing corrections, acquire the sensor values for dynamical pointing corrections, perform the time-stamped Az/El interpolation, compute static and dynamic corrections, send pointing coordinates to DS and TM and archive.
- SAF is the Safety module that takes care of any safety action and reports the alarm to the TM.
- ARC is the internal Archive, and contains components supplying the needed API to store and retrieve data from/to the circular monitoring archive and to permit the remote access of the logging files.
- Power Manager (POW) manages the power status of the hardware devices of the dish and capabilities of emergency power supply.
- The User interface, Test, Integration and Remote Support (USR) package is composed by the LMC GUI, Build and Test Suite and Software/Firmware Updater components. These components are responsible to implement the environment needed to build, test, integrate and maintain the LMC software system.

4.2 LMC software design with TANGO

TANGO is the control framework chosen to develop the LMC software of the different subsystem [5]. For the dish sub-elements, the current status foresees that Rx and SPF will use TANGO, whereas DS will not. At the time of writing, the software interface between DISH LMC and DS is under discussion.
TANGO is a distributed, object-oriented control system based on the CORBA and ZeroMQ middlewares. The heart of TANGO is the device concept. A device can be a piece or a collection of hardware, a logical device or o combination of these. TANGO includes a complete set of features for control, with generic tools for monitoring and is capable for managing large systems [6]. It is a very flexible framework and do not impose constraints on the choice of hardware or the operating system (it runs on Linux and Windows).
The preliminary architecture of the DISH LMC has been mainly designed on top of the TANGO framework.
In Figure the high-level view of the control system organization is reported. Dish LMC components will be defined in a Dish TANGO Domain, interacting with components deployed within the TM TANGO domain, e.g. in particular the TM Leaf Node and a Central Logger.

Downloaded From: https://www.spiedigitallibrary.org/conference-proceedings-of-spie on 07 Apr 2020
Terms of Use: https://www.spiedigitallibrary.org/terms-of-use

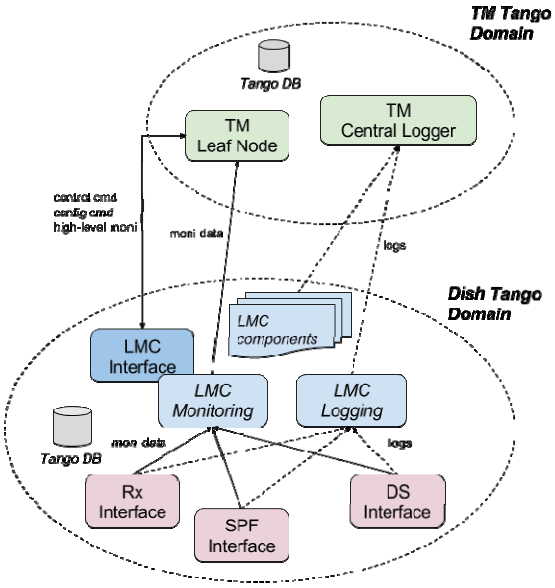

Figure 5 High-level control system organization

It is currently under definition whether Dish sub-element components are to be hosted within the LMC Tango domain or under a dedicated domain. Control domains are expected to start-up independently each other.
The interface realization with the TM domain will be probably defined as follows. A unique Dish Tango device server, named DSHLMCManager and defined in the ITM package, will act as an interface layer enabling TM to perform control and configuration operations and reporting high-level monitoring points. However, interactions with LMC are not intended to be limited to the interface device only. Indeed, with such layout, all LMC components will be visible and accessible to external Tango domains under established network and/or device access policies. Points of contacts will be captured in a Self-Description Data (SDD) information to be exposed to TM. It is expected that these will include, beyond the interface device, the local LMC Logger, monitoring aggregator components for drill-down purposes and archiving/GUI/life-cycle components.

A detailed description of the DISH LMC architecture is presented in the DDR document (*in prep.*). In this paper, as an example, we present an expanded description of the PNT package.

4.3 Pointing (PNT)

The responsibility of the PNT package is to manage all operations connected with the antenna pointing. The LMC receives pointing instructions from TM (via LMC.ITM package) every TBD seconds. The pointing instruction strategy is still TBD, but it shall consist of time-stamped coordinates or polynomials. In both cases LMC shall expand coordinates in order to send processed coordinates to DS with a time resolution of 100 ms. The expanded coordinates need to be corrected for local effects before they are sent to DS. Local effects include static and dynamic corrections.
Static corrections are derived from a model of the antenna that may take into account collimation errors, encoder offset, axis skew, azimuth axis tilt and structural flexure due to gravity. The TM shall provide LMC with the antenna static model parameters.
Dynamic corrections are derived from DS sensors reading (TBC). They include thermal deformation and wind. TM is responsible for providing LMC with the antenna dynamical model that allows LMC to compute dynamic corrections based on DS sensor values.
The PNT package shall eventually collect both static and dynamic corrections and apply them to the uncorrected coordinates received from TM. The corrected coordinates are sent to DS and back to TM (via ITM) and archived (LMC.ARC). In Fig. 6 we sketch the proposed internal block diagram design of the PNT package.

Downloaded From: https://www.spiedigitallibrary.org/conference-proceedings-of-spie on 07 Apr 2020
Terms of Use: https://www.spiedigitallibrary.org/terms-of-use

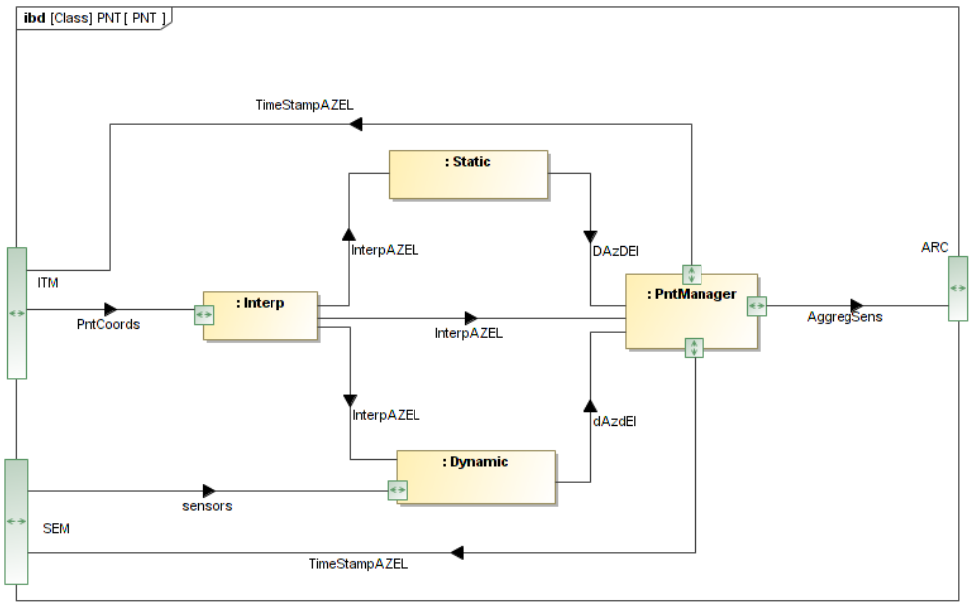

Figure 6 Internal PNT block diagram

The pointing design reported in Fig. 6 can be implemented by a single Tango device consisting of the class Pointing. The relative class diagram is proposed in Fig. 7.

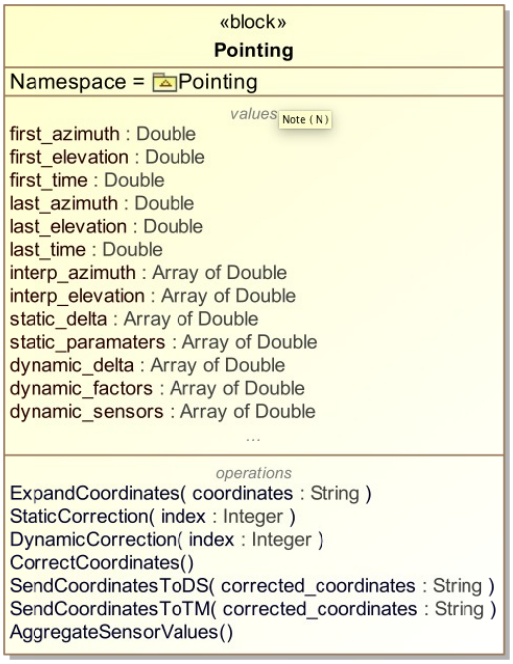

Figure 7 proposed class diagram for PNT.

The ITM can call the ExpandCoordinates method, with the uncorrected coordinates as input. The ExpandCoordinates method implements the PNT.Interp and PNT.Manager functionalities. The interpolated coordinates are stored as 3 arrays of double in the class member azimuth[], elevation[] and time[].

Downloaded From: https://www.spiedigitallibrary.org/conference-proceedings-of-spie on 07 Apr 2020
Terms of Use: https://www.spiedigitallibrary.org/terms-of-use

The method CorrectCoordinates is called, which calls in sequence the methods StaticCorrection and DynamicCorrection per each interpolated coordinate. The former, implementing the PNT.static functionality, calculates the static corrections, which depend on the uncorrected coordinates and on the previously stored telescope model (static_parameters[]), and store the correction in the member array static_delta[2]. The latter, implementing the PNT.dynamic functionality, perform a similar computation and store the correction in the member array dynamic_delta[2]. The dynamic_sensors and dynamic_factors arrays store the values read from DS sensors and dynamic factor to be applied to coordinates to calculate dynamic_delta. The choice of these variables to deal with dynamic correction is here just a proposal, since their optimal definition will critically depend on the dynamic antenna model, which is still TBD.
CorrectCoordinates then applies static and dynamic corrections by adding the static_delta[] and dynamic_delta[] to the uncorrected coordinates. The corrected time-stamped coordinates are sent to SEM.DS by the SendCoordinatesToDS method, which internally calls the AppendCoordinates (TBC) method exposed by SEM.DS.
The SendCoordinatesToTM method in then called. It reads the CFG attribute that store whether DS is in operating mode. If so it sends the corrected coordinates to ITM.
The sensors values for dynamic correction are finally aggregated and sent to ITM and ARC by the AggregateSensorValues method.
Other detailed aspects of the PNT implementation cannot be defined yet, depending on choices by TM (for example pointing instruction strategy) and DS (for example the antenna model). The class diagram presented in this document relies on reasonable assumption derived from requirements concerning pointing, but it could undergo significant changes once all undefined activities related to the pointing operations will be fixed. For this reason, also any kind of code optimization related to Tango shall be deferred until all external factors will have been properly defined.
In Fig. 8 we report a sequence diagram of the mere normal pointing operation use case, that is those operations starting from ITM receiving uncorrected coordinates from TM and ending with PNT sending corrected coordinates to DS and ITM.

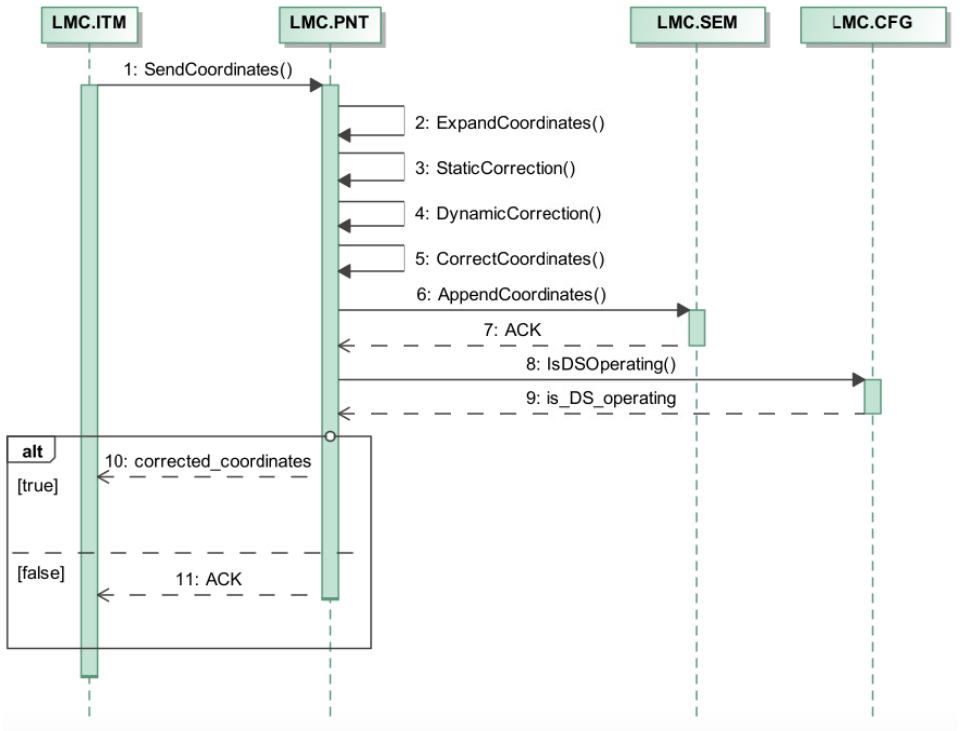

Figure 8 Sequence diagram of the pointing operation during a normal observation.

Downloaded From: https://www.spiedigitallibrary.org/conference-proceedings-of-spie on 07 Apr 2020
Terms of Use: https://www.spiedigitallibrary.org/terms-of-use

5. DISH LMC HARDWARE ARCHITECTURE

5.1 Hardware PBS

Figure shows the hardware PBS, divided between physical interface (ITF) and Computer Element (CPT). The components of the ITF are the power interface (POW) and the communication interface (COM). The CPT, on the other hand, includes the other five hardware modules:

- Computer enclosure (ECL)
- Processor board (PRC)
- Hard disk (HDD)
- Power supplies (POW)
- Cooling fans (FAN)

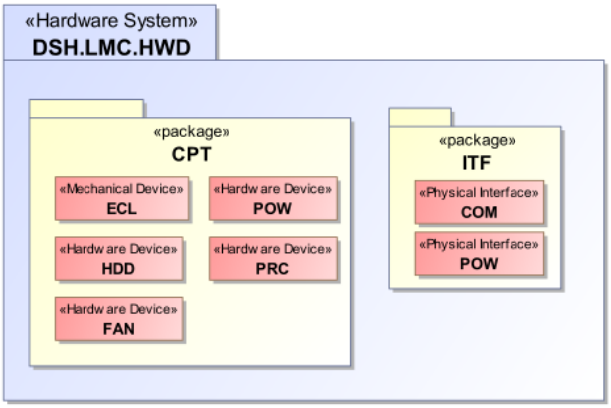

Figure 9 LMC hardware PBS

5.2 Hardware features

LMC hardware components are mainly a computerized unit with its interfaces (see Figure). The computer is a 2U 19″ Rugged PC, complying with the Design Specification for the rack-mount Rugged Computer. The PC adopts on-board CPU and memory as well as slots compliant with EPE standard in rugged design, which improves the anti-vibration performance of the product and the modular design of the IO connectors, enhancing the reliability and maintainability of the connection.
Both of the heat dissipation and EMC performance of the PC have been optimized.
The PC contains the new generation Intel® low power consumption and high speed chipset QM57 and integrates HD, dynamic, high-speed graphics card. It is equipped with 500G SSD hard disk and fans with dust-proofing filter.
The LMC system is located in the lowest part of the Dish pedestal. It will be mounted in a rack together with the controllers of DS, SPF, the SPFRx Receiver Pedestal Unit, the Fibre Routing Panel, the SaDT equipment and the UPS. The cooling system for the Shielded Compartment is based on the outside ambient air ventilation concept as used on MeerKAT.

Downloaded From: https://www.spiedigitallibrary.org/conference-proceedings-of-spie on 07 Apr 2020
Terms of Use: https://www.spiedigitallibrary.org/terms-of-use

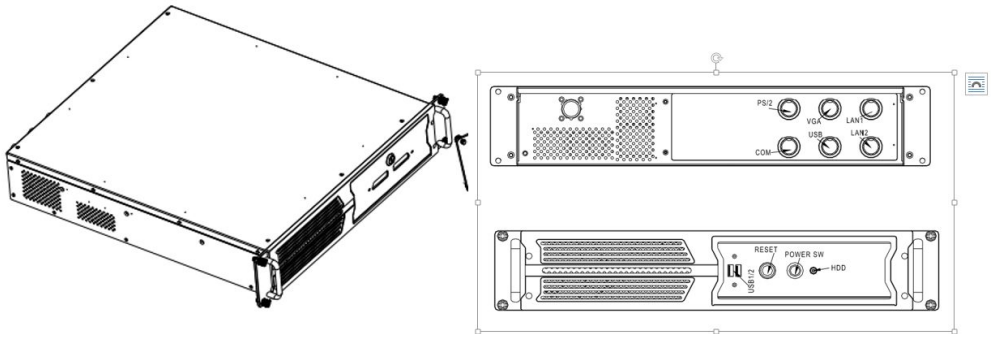

Figure 10 LMC physical controller overview

6. CONCLUSIONS

We described the software and hardware specification of the SKA Dish Local Monitor and Control system, focusing on the main components identified during the development of the Detailed Design document. The software is divided in 11 logical packages each one implementing a specific function of the LMC. Each package will consist of one or more TANGO devices. The general SKA software design is now entering a harmonization phase including standardization of common functionalities between element LMCs. Once this phase is concluded the software prototype is expected to be released.

REFERENCES

[1] http://www.skatelescope.org
[2] L. van den Heever, "Meerkat Control and Monitoring – Design Concepts and Status", MOCOAAB06, ICALEPCS 2013, San Francisco, CA, USA
[3] http://www.atnf.csiro.au/projects/askap/index.html
[4] S. Riggi, V. Baldini, U. Becciani, R. Cirami, A. Costa, A. Ingallinera, A. Marassi, G. Nicotra, C. Nocita, F. Schillirò, C. Trigilio, "Status of the Local Monitoring and Control System of SKA Dishes", ICALEPCS2015 Melbourne, Australia,
[5] www.tango-controls.org
[6] The TANGO Control System Manual Version 9.2

Downloaded From: https://www.spiedigitallibrary.org/conference-proceedings-of-spie on 07 Apr 2020
Terms of Use: https://www.spiedigitallibrary.org/terms-of-use