32nd URSI GASS, Montreal, 19–26 August 2017

Design of Super-Resolving Toraldo Pupils for Radio Astronomical Applications

Luca Olmi[(1)(2)], Pietro Bolli[(1)], Luca Carbonaro[(1)], Luca Cresci[(1)], Daniela Mugnai[(3)], Enzo Natale[(1)], Renzo Nesti[(1)], Dario Panella[(1)], Juri Roda[(4)] and Giampaolo Zacchiroli[(4)]

(1) Istituto Nazionale di Astrofisica (INAF), Osservatorio Astrofisico di Arcetri, Largo E. Fermi 5, I-50125 Firenze, Italy
olmi.luca@gmail.com

(2) University of Puerto Rico, Rio Piedras Campus, Physics Dept., Box 23343, UPR station, San Juan, Puerto Rico, USA

(3) Consiglio Nazionale delle Ricerche (CNR), Istituto di Fisica Applicata Nello Carrara, Via Madonna del Piano 10, I-50019 Firenze, Italy

(4) Istituto Nazionale di Astrofisica (INAF), Istituto di Radioastronomia, Via P. Gobetti 101, I-40129 Bologna, Italy

Abstract

More than half a century ago, in 1952, Giuliano Toraldo di Francia suggested that the resolving power of an optical instrument could be improved using a filter consisting of finite-width concentric coronae of different amplitude and phase transmittance, now known as Toraldo Pupils (TPs). The concept of "super-resolution" was born, and in the current literature it is generally associated with various methods for improving the angular resolution of an optical imaging system beyond the classical diffraction limit. In the microwave range, the first successful laboratory test of TPs was performed in 2003. These first results suggested that TPs could represent a viable approach to achieve super-resolution in Radio Astronomy. We have therefore started a project devoted to an exhaustive study of TPs and how they could be implemented on a radio telescope. In this work we present a summary of the status of this project, and then we describe a preliminary design to implement a TP system on a 32-m radio telescope.

1 Introduction

The concept of super-resolution refers to various methods for improving the angular resolution of an optical imaging system beyond the classical diffraction limit. In optical microscopy, several techniques have been successfully developed with the aim of narrowing the central lobe of the illumination Point Spread Function[1]. In Astronomy, however, no similar techniques can be used. A feasible method to design antennas and telescopes with angular resolution better than the diffraction limit consists of using *variable transmittance pupils* [1, 2], which are also known as Toraldo variable transmittance pupils (TPs, hereafter) since they were introduced for the first time by G. Toraldo di Francia at a colloquium on optics and microwaves in 1952 [3]. In the case of a circular aperture, Toraldo di Francia suggested that the classical limit of optical resolution could be improved using a filter consisting of either infinitely narrow concentric rings or finite-width concentric annuli of different amplitude and phase transmittance in the entrance pupil of an optical system (see Fig. 1).

[1] see, e.g., http://zeiss-campus.magnet.fsu.edu/articles/superresolution/introduction.html

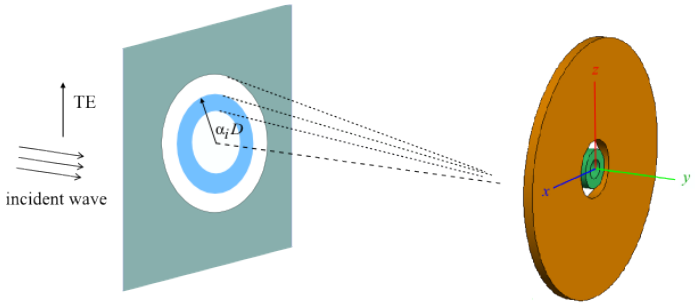

Figure 1. The finite-width concentric coronae with variable transmittance in an ideal TP (left) and its FEKO model (right). The dielectric hollow cylinder (in green) provides a phase inversion.

Based on previous results [4, 5] we have started a project devoted to a more complete analysis of TPs and how they could be implemented on a radio telescope. During the first part of this work we have conducted extensive electromagnetic (EM) numerical simulations of TPs, using a commercial full-wave software tool. We have used these simulations to study various EM effects that can mask and/or modify the performance of the pupils and to analyze the near-field (NF) as well as the far-field (FF) response. We then used these EM simulations to prepare more comprehensive laboratory testing.

2 EM numerical simulations

The original analytical description of the TP given by Toraldo di Francia assumed an ideal optical system where, for example, the transmittance filters are infinitely thin and an ideal source is assumed that achieves both the required amplitude apodization and uniform phase illumination over

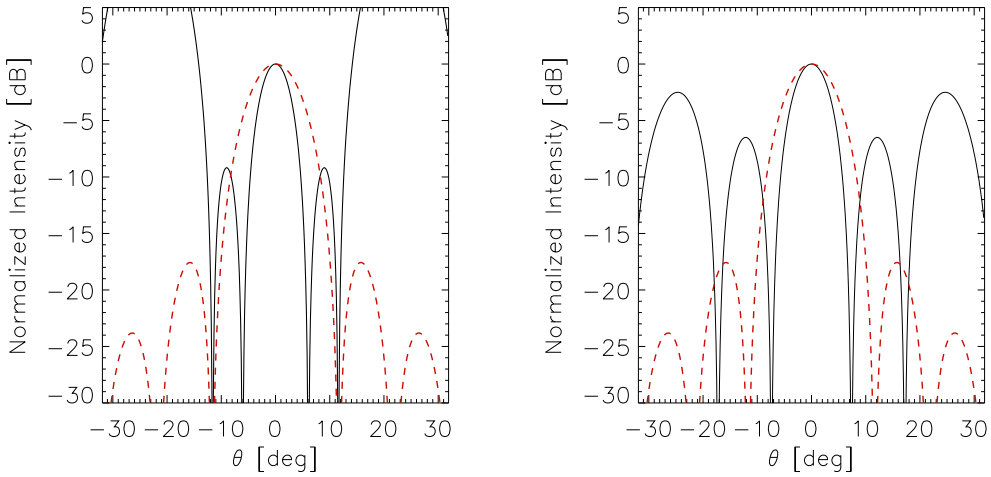

Figure 2. *Top panel*. Plot of the far-field at 20 Ghz for a 3-coronae TP (TP3, 9cm in diameter) with amplitude apodization (solid line) compared with the field of an open pupil (red dashed line). *Bottom panel*. Far-field obtained with the TP3 illuminated by a plane wave and no amplitude apodization.

the pupil. Any practical realization of a TP in the microwave range cannot operate under such ideal conditions, and thus EM numerical simulations are required to validate and test the performance of a TP under realistic laboratory conditions (see Fig. 1). Therefore, we carried out an extensive series of EM numerical simulations using the commercial software FEKO[2].

A detailed description of the EM simulations has been presented in a previous work [6]. Specifically, the NF simulations were used for a direct comparison with the laboratory measurements. Our results confirm the super-resolution effect, even with no amplitude apodization, as also shown by the analytical model (see Fig. 2). They also show that TPs with different numbers of coronae can be used to achieve a trade-off between resolution gain, strength and position of the sidelobes.

3 Laboratory measurements

Our experimental measurements of the EM performance of simple TPs aimed at confirming and expanding the laboratory tests already carried out in the microwave range [4, 5]. Specifically, we had two main goals: *(i)* detect and quantify the super-resolution effect with at least two TPs having different shapes; and, *(ii)* evaluate and possibly reduce some of the effects that can mask and/or alter the super-resolution effect. An additional goal consisted in the determination of the FF radiation diagrams from NF measurements.

The experimental measurements, which are fully described elsewhere [7], were conducted in the anechoic chamber of the Istituto di Fisica Applicata "Nello Carrara" of CNR[3].

We performed planar scannings at a frequency of 20 GHz of the NF with the open pupil and two different types of TP. Our measurements show that the super-resolution effect is achieved with both the three- and four-coronae TPs, and also show a good agreement with the FEKO numerical simulations. The different resolution gain and sidelobes obtained with the two TPs confirm that the number and geometry of the coronae can be used to achieve a trade-off between the super-resolution effect and the sidelobes relative intensity and position. This is important in order to optimize a TP-system designed to operate on a radio telescope.

4 Preliminary design of a TP system for a radio telescope

4.1 Design concept

The next step in this project consists in the design and field-test of a prototype TP optical system to be mounted on a radio telescope. We identified two main criteria to guide this first preliminary field-test: *(i)* the prototype optical system must be designed around the simplest TPs, postponing optimization (requiring more complex pupils, Olmi et al., *in prep.*) to future systems; *(ii)* the TP system must be retrofitted to one of the existing K-band radio receivers on the Italian radio telescopes, thus minimizing any required modification to the mechanical mounting or structure of the receiver.

Given all these requirements, we decided that these upcoming tests would be better performed using the 18-26.5 GHz dual-horn receiver mounted at the Cassegrain focus of the 32-m Medicina antenna in Italy[4]. The main advantage of

[2] http://www.altairhyperworks.com/product/FEKO
[3] http://www.ifac.cnr.it/
[4] http://www.med.ira.inaf.it/

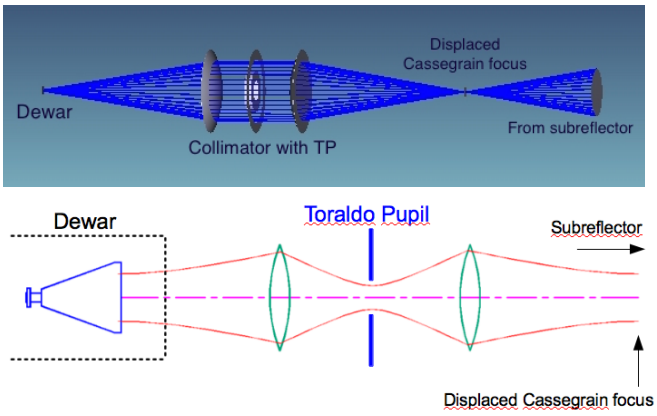

Figure 3. *Top panel.* Schematics of the collimator optics. Following the displaced Cassegrain focus are the two lenses of the collimator, with the receiver focus to the left of the figure. A three-coronae TP is positioned between the two lenses. *Bottom panel.* Gaussian-beam propagation in the collimator. The beam-waist at the modified Cassegrain focus is transformed by the first lens into a beam-waist between the two lenses, where we have a plane wavefront. This beam-waist is then converted into an output beam-waist at the feedhorn of the receiver.

this choice is that the TP system can be easily mounted in front of the receiver without the need to change the current mechanical and optical assembly of the receiver. Only minor modifications are required to connect the TP system to the dewar.

The TP, like any other optical device designed to modify the incident wavefront on the telescope, should ideally operate at the entrance pupil of the telescope, i.e., the primary mirror. For example, the deformable mirror of an active- or adaptive-optics system could be used for this task [1]. For antennas and telescopes where such systems are not available, an image of the entrance pupil can be used to place a transmittance filter (or mask). This is shown in Fig. 3, where a two-lens collimator is placed after the Cassegrain focus. The first lens of the collimator generates an image of the primary which is then brought to a subsequent focus by the second lens. The lenses could also be replaced by off-axis mirrors.

However, two main problems must be solved to allow the mechanical and optical implementation of this system on the Medicina antenna. The first problem is caused by the receiver itself that cannot be easily moved to make room for the collimator, to be mounted in front of the dewar. Instead, it is more convenient to move the Cassegrain focus towards the subreflector, so that the new focal position can be used as the input focus to the collimator. The output focus from the collimator would then be placed at the phase center of the receiver. Secondly, at the frequency of operation (20 GHz) Gaussian-beam propagation must be considered in order to determine the optimum position of the

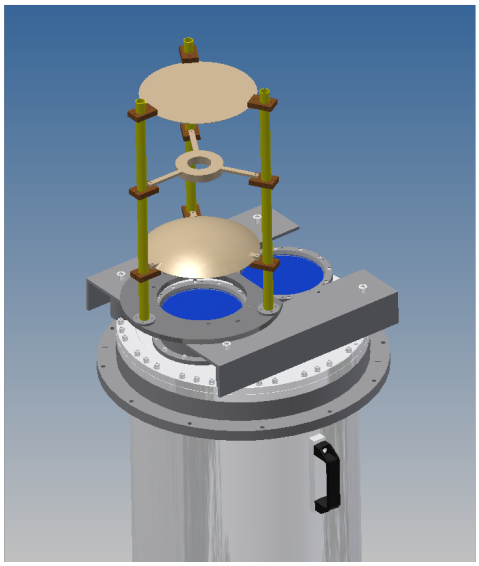

Figure 4. Preliminary design of the mechanical structure to mount the collimator on the dewar, which shows the two windows of the K-band dual-feed receiver. The TP in this figure is shown between the two lenses without the plane screen and the circular aperture that would limit the amplitude of the beam.

TP (see Fig. 3). We discuss these two problems in the next section.

4.2 Implementation

The Cassegrain focus can be moved away from the receiver by displacing the subreflector along the optical axis. For example, by displacing the subreflector 1.5 cm away from the primary reflector, the Cassegrain focus is also displaced along the optical axis in the same direction by about 80 cm. The antenna gain at the displaced focus is almost the same as that at the nominal Cassegrain focus. The focal ratio, $F_c' = f'/D$ at the new Cassegrain focus is slightly different from the nominal value, $F_c = f/D$ (where f and f' are the system focal lengths before and after displacing the subreflector and D is the telescope diameter).

Therefore, the collimator must satisfy two main constraints: *(i)* because of the limited subreflector displacement along the optical axis (for both mechanical and optical reasons), and the consequent limited displacement of the Cassegrain focus away from the dewar, the collimator cannot exceed a maximum optical length (focus-to-focus) of about 1 m to be able to fit between the new system focal position and the dewar; *(ii)* the collimator must also perform the function of focal ratio converter in order to have the same value of F_c at the phase center of the receiver feedhorn. Figure 4 shows the preliminary design of a simple mechanical structure that can be used to connect the collimator to the dewar. The output focus of the collimator will coincide with the phase center of the feedhorn, inside the dewar.

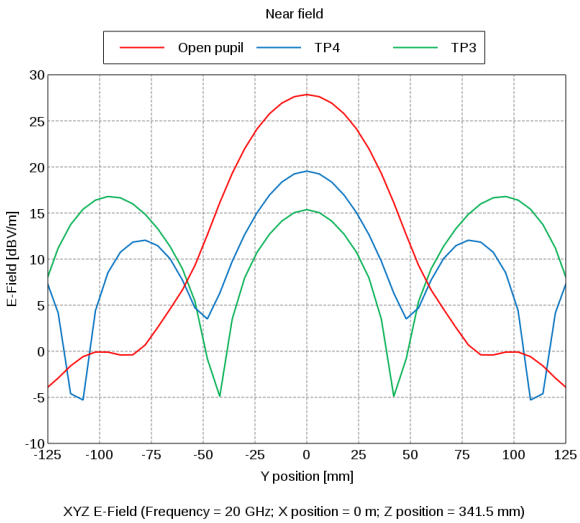

Figure 5. Modeled distribution of the near-field at 20 GHz for the open pupil (red curve), for a 3-coronae TP (green curve) and for a 4-coronae TP (TP4, blue curve). The fields shown here are cuts along the *y*-axis at a distance of 34.1 cm from the second lens of the collimator, where the peak of the field of the open pupil is found. The FWHMs are 4.3 cm and 3.8 cm for the open pupil and both TPs, respectively.

4.3 EM numerical simulations of the collimator system

Figure 3 shows a schematic model of the collimator. In addition to the input beam-waist (at the position of the displaced Cassegrain focus) and the output beam-waist (at the feedhorn) another beam-waist is formed between the two lenses. Ideally, the plane wavefront at this beam-waist should represent the optimum position to place the TP within the collimator, since the TP requires to be illuminated with a uniform phase [6]. The diameter of the lenses should be large enough to limit the amount of beam truncation, but larger lenses also have larger diameters and thickness (if the radius of curvature is held constant) thus increasing the transmission loss.

The optical system shown in Fig. 3 has then been modeled in FEKO to analyze potential effects that could negatively affect the expected super-resolution. In order to be able to perform this simulation we first determined the field distribution at the Cassegrain focus of the Medicina antenna. These fields were then imported in the simulation of the collimator, and were used as the illuminating source of the collimator optics. The simulated NFs are shown in Fig. 5, where cuts of the fields along the *y*-axis are plotted. Both TPs show a reduction in their FWHM and the TP3 shows higher sidelobes compared with the TP4.

5 Conclusion

An achievable method to design radio telescopes with resolution better than the classical diffraction limit consists of using Toraldo variable transmittance pupils. We have analyzed both the near-field and the far-field response of simple types of TPs using full-wave EM numerical simulations. We have then used these EM simulations to prepare comprehensive laboratory tests, which confirm Toraldo di Francia's model and also indicates that TP-based super-resolving systems could be used on a radio telescope, though with several problems that need to be addressed.

We are now in a preliminary design phase to develop a TP optical system that will be tested for the first time on a radio telescope. The optical system consists of a two-lens collimator that will be placed in front of the receiver and will only require to modify the position of the Cassegrain focus through the displacement of the subreflector. The TP will be placed within the collimator at an image of the entrance pupil. Gaussian-beam propagation has been taken into account to design the collimator, and EM numerical simulations have been performed.

6 Acknowledgments

We gratefully acknowledge the partial support of the Ente Cassa di Risparmio di Firenze (Italy).

References

[1] M. P. Cagigal, V. F. Canales, and J. E. Oti, "Design of Continuous Superresolving Masks for Ground-based Telescopes," *Publications of the Astronomical Society of the Pacific*, vol. 116, pp. 965–970, Oct. 2004.

[2] V. F. Canales, D. M. de Juana, and M. P. Cagigal, "Superresolution in compensated telescopes," *Optics Letters*, vol. 29, pp. 935–937, May 2004.

[3] G. Toraldo di Francia, *Il Nuovo Cimento (Suppl.)*, vol. 9, p. 426, 1952.

[4] D. Mugnai, A. Ranfagni, and R. Ruggeri, "Pupils with super-resolution," *Physics Letters A*, vol. 311, pp. 77–81, May 2003.

[5] A. Ranfagni, D. Mugnai, and R. Ruggeri, "Beyond the diffraction limit: Super-resolving pupils," *Journal of Applied Physics*, vol. 95, pp. 2217–2222, Mar. 2004.

[6] L. Olmi, P. Bolli, L. Cresci, D. Mugnai, E. Natale, R. Nesti, D. Panella, and L. Stefani, "Super-resolution with Toraldo pupils: analysis with electromagnetic numerical simulations," in *Ground-based and Airborne Telescopes VI*, ser. Proc. SPIE, vol. 9906, 2016.

[7] L. Olmi, P. Bolli, L. Cresci, F. D'Agostino, M. Migliozzi, D. Mugnai, E. Natale, R. Nesti, D. Panella, and L. Stefani, "Laboratory measurements of super-resolving Toraldo pupils for radio astronomical applications," *Experimental Astronomy, submitted*, 2016.