Challenges due to Rayleigh Backscattering in Radio over Fibre links for the Square Kilometre Array Radio-Telescope

Jacopo Nanni [(1)], Andrea Giovannini [(1)], Simone Rusticelli[(2)], Federico Perini[(2),]
Jader Monari [(2)], Enrico Lenzi [(3)] and Giovanni Tartarini [(1)]
[1]DEI-University of Bologna, Bologna, Viale del Risorgimento 2, Italy
[2]IRA-INAF, Medicina (Bologna), Via Fiorentina 3513, Italy
[3] Protech S.a.S, Castelfranco Veneto (TV), Via dei Pini, 21 Italy
e-mail: jacopo.nanni3@unibo.it

ABSTRACT
In the realization of the Low Frequency Aperture Array (LFAA) within the Square Kilometre Array (SKA) project, the radiofrequency (RF) signals coming from sky and celestial sources, and received by each of the 130k+ antennas, are transmitted to the signal processing unit through analogue Radio over Fibre links. Within this low frequency band, the relatively low levels of the power of such RF signals may give rise to unexpected distortion effects. The present works highlights the physical origin of such undesired spurious frequencies generation, which can be also found in other applicative telecommunications scenarios. The details of a possible solution able to keep the above mentioned distortion terms at acceptably low levels are finally illustrated.
Keywords: Square Kilometre Array, Radio-over-Fibre, Rayleigh Backscattering.

1. INTRODUCTION

The Radio Telescope named Square Kilometre Array (SKA) will be a hundred times more sensitive than any existing one, providing a collecting area larger than 1 km^2[1] At present, the phase-1 of SKA is about to be realized, both in its low (SKA1-LOW, located in Australia) and mid (SKA1-MID, located in South Africa) frequency band coverage versions. In particular, SKA1-LOW [2] will consist in a sparse Aperture Array (AA) formed by 131,072 antennas (512, stations, each one of which hosts a sparse array of 256 antennas), and will cover the frequency range 50 to 350 MHz in double polarization.

Indeed, from each antenna two Radio over Fibre (RoF) links of lengths ranging from about $L = 2km$ to $L = 6km$ will separately transmit to the Remote Processing Room the two linear polarizations of the RF received signal, utilizing optical carriers with wavelengths respectively equal to $\lambda_1 = 1330nm$ and $\lambda_2 = 1270nm$. Given the huge number of RoF links necessary to realize the complete structure, in view of the deployment of SKA1-LOW, a verification system named Aperture Array Verification System 1 (AAVSl), has been realized [3], involving a lower number of antennas and consequently of RoF links, which are analysed in all their potential impairment aspects. Of primary importance is in this framework the accurate control of nonlinearities, since the undesired generation of spurious frequency components at the receiving end can determine intra-band distortion in radioastronomic systems.

More generally, in RoF systems for telecommunications, nonlinearities can lead to undesired inter/intra channel distortions. In, these systems, utilizing either Standard Single Mode Fibres (SSMFs), Multimode Fibres (MMFs), Multi Core Fibres (MCFs) or even Plastic optical Fibre (POF), [4-7], are often utilized for distributing radio signals from a base station (BS) to remote antenna units (RAU), located either in out-door or in-building scenarios. In these cases, nonlinearities in the optical link are primarily generated by the imperfect linearity of laser and/or photodiode, or by the combination of laser chirp and chromatic dispersion in long haul systems [8-9].

In the case of radioastronomic plants, such as the ones thought for Square Kilometre Array (SKA) project [10], both these causes can be considered as negligible. Indeed, the systems operate in the second optical window using G.652 fibre which guarantees zero chromatic dispersion. At the same time the signals transmitted in the RoF links are sky signals (which in turn consist fundamentally in noise) plus possible RF interfering (RFI) signals, which all exhibit a relatively low level of power. This means that the imperfections of the common laser and photodiode characteristics are negligible.

However, a further cause of nonlinear behaviour arises in this case, which is related to the interaction of the transmitted signal with its portion which is re-transmitted after having undergone a retro-diffusion by Rayleigh Backscattering (RB) [11]. The effects of RB on the performances of optical fibre systems have been deeply studied in the past, putting into evidence the increment of noise determined [12,13].

In this work, a further effect is put into evidence, namely the relationship between RB and undesired creation of nonlinear effects in directly modulated optical systems. This phenomenon can indeed be highlighted when RoF systems like the ones operating in SKA1-LOW are concerned, where the particular condition is present in which

the modulating RF signal may exhibit at the same time a low value of power and a low value of the central frequency.

In the next sections, the phenomenon is described both theoretically and experimentally, and solutions that can be adopted will then be illustrated and discussed in their practical feasibility

2. EXPERIMENTAL RESULTS

The analogue RoF system considered is schematized in Fig.1. Its role consists in transmitting transparently the signal received from a generic receiving antenna to the remote processing unit.

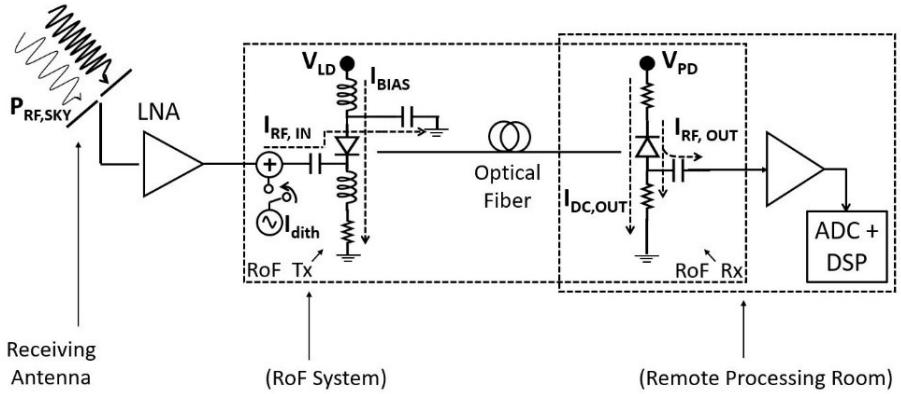

Figure 1. Simplified scheme of one of the two RoF downlinks transmitting to the remote processing room each one of the two polarizations received by a generic antenna of AAVS1. $P_{RF,SKY}$: Radio frequency (RF) electromagnetic power received from celestial sources; LNA: Low Noise Amplifier; $I_{RF,IN}$: laser input RF current; I_{BIAS} : laser bias current; V_{LD} : laser direct biasing voltage; $I_{RF,OUT}$: RF current detected; $I_{DC,OUT}$: DC current detected; -V_{PD}: photodiode reverse biasing voltage; ADC: Analog-to-Digital Converter. DSP: Digital Signal processor. RoF Tx, RoF Rx: RoF transmitter, receiver; I_{dith}: dithering tone.

The input current $I_{RF,IN}$ contains, together with the desired signal, a number of undesired and unavoidable RFI signals which are detected as well by the receiving system. These RFI signals as a first approximation can be represented by CW tones, whose power in the worst cases reaches a value of about $P_{RF,IN} = -30dBm$ at the laser input. RFI's can be well identified and controlled. However, despite their relatively low power, they can determine at the RoF receiver undesired distortions which should be avoided.

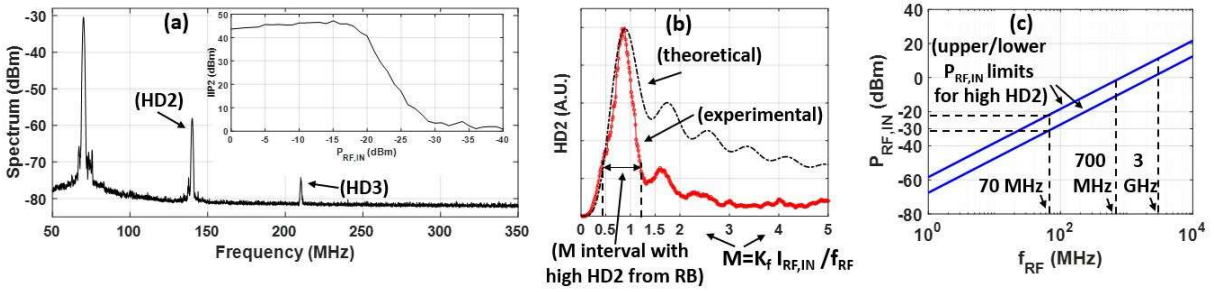

Figure 2. (a): Spectrum of the signal detected when $P_{RF,IN} = -30dBm$, with $f_{RF} = 70MHz$. Harmonic distortion terms of second (HD2) and third (HD3) order are put into evidence. (Inset): Behaviour of the Input Intercept Point of order two (IIP2) of the RoF link, for varying $P_{RF,IN}$. (b): Modelled and experimental behaviour of HD2 varying the parameter $M = K_f I_{RF,IN} / f_{RF}$. (c) Intervals of $P_{RF,IN}$ where HD2 due to Rayleigh Backscattering is relatively high for a given f_{RF}. See text for details.

To analyse the problem, the RoF system depicted in Fig.1 was studied in laboratory. It was composed of a DFB laser emitting at $\lambda_1 = 1330nm$, with $I_{BIAS} = 26mA$, a threshold current $I_{TH} = 5mA$ and a slope efficiency $\eta = 0.11mW/mA$ The length of the fibre span was $L = 6km$ while the photodiode utilized exhibited a Responsivity $R = 0.9mA/mW$ at the operating wavelength The input current $I_{RF,IN}$ consisted in a sinusoidal tone with frequency f_{RF} , while a signal analyser /spectrum analyser was used to receive and analyse the output current $I_{RF,OUT}$.

Fig. 2(a) reports a typical spectrum of the detected signal measured at the receiving end with $P_{RF,IN} = -30dBm$ (corresponding to $I_{RF,IN}$~$0.2mA$) and $f_{RF} = 70MHz$. The nonlinearities of the second order for varying $P_{RF,IN}$ are

further analysed in the inset, reporting the Input Intercept Point of order two ($IIP2$), where low values of $IIP2$ mean high levels of the undesired nonlinearities, and vice versa.

From Fig.2(a) it can be appreciated, that, together with the fundamental tone, also undesired components at frequencies double, triple, etc are present, denoting a nonlinear behaviour of the RoF link characteristic. The inset of the same figure allows then to highlight an unexpected behaviour. Indeed, contrary to intuition, performing a decrease in $P_{RF,IN}$, $IIP2$ experiences a sudden fall, indicating that an increase in the nonlinearities of the second order takes place for about $P_{RF,IN} \leq -20dBm$.

3. ANALYSIS OF THE PHENOMENON AND ADOPTED SOLUTION

The nonlinear behavior just described is due to the combined effect of RB and laser frequency chirp, the last phenomenon consisting in a phase/frequency modulation of the optical carrier associated with the direct modulation of the laser source[8]. Considering the case when the modulating current consists in a single sinusoidal tone $I_{RF,IN}cos(\omega_{RF}t)$, where $\omega_{RF} = 2\pi f_{RF}$, the main component of the electric field $E_{TX}(t)$ emitted by the laser with optical angular frequency ω_0 can be expressed as:

$$E_{TX} = E_0\sqrt{1 + m_I \cos(\omega_{RF}t)}\, e^{jMsin(\omega_{RF}t)}e^{j\omega_0 t} = E_0\sqrt{1 + m_I \cos(\omega_{RF}t)}\sum J_n(M)e^{jn\omega_{RF}t}\, e^{j\omega_0 t} \quad (1)$$

where E_0 is the field amplitude if modulation were not applied, m_I is the optical modulation index given by $m_I = I_{RF}/(I_{bias} - I_{th})$ with I_{bias}, I_{th} representing the bias and the threshold currents of the laser, respectively. The quantity $K_f[Hz\ /A]$ represents the so called adiabatic chirp factor, while $M = K_f I_{RF,IN}\ /f_{RF}$ is the phase modulation index. The summation at the right hand side (RHS) of Eq. (1) comes from the Anger-Jacobi expansion of the factor $e^{jMsin(\omega_{RF}t)}$. With the notation $J_n(M)$ the Bessel function of first kind of argument M and of order n is indicated. Assuming for simplicity unitary attenuation, at the receiver side the total electrical field is given by the following expression:

$$E_{out}(t) = E_{TX}(t) + E_{BS}(t) = E_{TX}(t) + \sum_k c_k E_{TX}(t - \tau_k) \quad (2)$$

where $E_{BS}(t)$, represents the field reflected for RB which is subsequently re-emitted by the laser. As reported at the RHS of Eq.(2), this term is modelled as the sum of many terms each one of which represents a copy of the initially transmitted field E_{TX} having delay τ_k and coefficient c_k.

Computing the current at the output section of the photo-detector it is:

$$i_{out} = R \cdot |E_{out}|^2 = R \cdot [|E_{TX}|^2 + |E_{BS}(t)|^2] + R \cdot 2\Re\{E_{TX}(t) \cdot E_{BS}^*(t)\} \quad (3)$$

where R is the responsivity of the detector and where the term $|E_{BS}(t)|^2$ can be regarded as negligible. After a derivation, similar to the one utilized by Kruger and Kruger in a different context [14], it can be shown that, in case all the τ_k's present in the expression of $E_{BS}(t)$ were exhibiting a same value τ_0, the contribution of the last term at the RHS of Eq.(3) to the power spectrum of i_{out} would exhibit at the angular frequencies $n\omega_{RF}, n = 2,3,\ldots$ undesired peaks proportional to the quantity $J_n^2\left(2Msin(\frac{\omega_{RF}\tau_0}{2})\right)$. In reality, focalizing the attention on the term of the second order, the peak at $2\omega_{RF}$ (i.e. the value of HD2) will have a behaviour proportional to the average performed over the various τ_k's of $J_2^2\left(2Msin(\frac{\omega_{RF}\tau_k}{2})\right)$ which is represented in Fig.2(b) as a function of M.

Fig.2(b) shows that the impact of the second harmonic term is maximum for about $M \in [0.4,1.2]$,. which, given the value of $K_f \sim 300[MHz\ /mA]$ of the lasers utilized, corresponds roughly to $P_{RF,IN} \in [-31, -21]\ dBm$. The same figure explains also why, contrary to intuition, higher values of $P_{RF,IN}$, i.e., for a given f_{RF}, higher values of M, correspond to lower values of HD2 (i.e. to higher values of $IIP2$).

Fig.2(c) explains further why this undesired behaviour has been noticed in the context of the SKA LOW project. Indeed, given the relatively low values of the RF frequencies considered, the condition $M \in [0.4,1.2]$ is met just in correspondence to the low values of $P_{RF,IN}$ here utilized.

On the contrary, when the frequencies of the signals transmitted in the RoF link are of few GHz (see the case of 3GHz in Fig 2(c)), like in LTE and also part of 5G systems, the same values of M are reached for $P_{RF,IN}$ of the order of some dBm's. As mentioned in the Introduction, with such levels of $P_{RF,IN}$, the other nonlinearities characteristic of these systems typically hide the phenomenon described here. In some other applicative cases, however, these RB related nonlinearities may be present as well. These include the transmission of signals utilizing either the higher RF carriers (hundreds of MHz) assigned to Community Antenna Television (CATV) services, or the lower carriers assigned to LTE signals (see the case of 700MHz in Fig 2(c)) .Values of $P_{RF,IN}$ belonging roughly to the range $[-15dBm, -5dBm]$ can indeed be at the same time high enough to be utilized for short-range signal distribution and small enough to prevent the other causes of nonlinearity to hide the RB-generated ones

A possible solution to the problem consists in the introduction in the system of an additional modulation at low frequency (of the order of tens of kHz) which determines an enlargement of the laser linewidth. This solution, which corresponds to the scheme of Fig.(1) where the switch placed before the RoF Tx is connected, has already been proposed in the past to reduce the undesired increase of the noise floor caused by RB [15]. Indeed, this same

solution can be advantageously exploited also in the present case, where the detriment to combat consists in the undesired creation of spurious frequency terms.

The physical reason of this beneficial effect lies in the fact that this so-called dithering modulating tone performs an important enlargement of the spectrum of $E_{TX}(t)$. As a consequence, the contribution to the power spectrum of i_{out} coming from the last addend at the RHS of Eq. (3) tends to become a sort of floor where the nonlinearities are greatly reduced. The comparison Fig.3(a) and 3(b) with Fig.2(a) (inset included) allow to appreciate the effect of the introduction of such dithering tone.

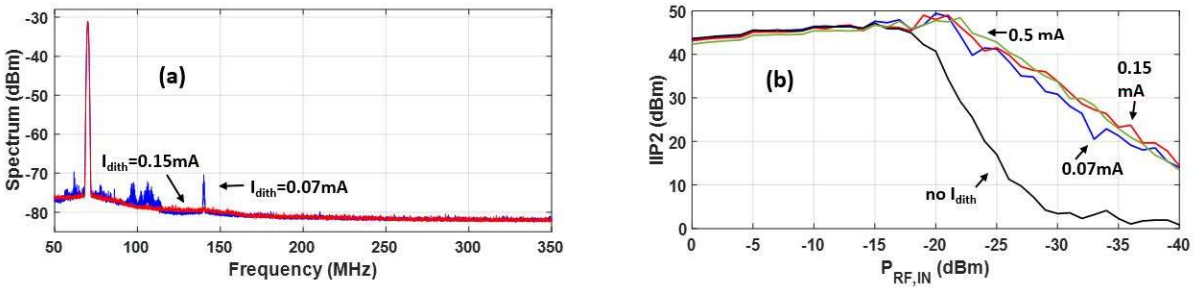

Figure 3. (a): Same as Fig.2(a), but with the additional application of dithering tones of varying amplitudes I_{dith}. (b): Behaviour of $IIP2$ vs $P_{RF,IN}$ for different values of I_{dith}. See text for details

Indeed, in Fig. 3(a) it can be appreciated that the undesired distortion terms are greatly reduced already for $I_{dith} = 0.07mA$, while for $I_{dith} = 0.15mA$ they have almost disappeared. Fig. 3(b) confirms that $IIP2$ increases with I_{dith} for $P_{RF,IN} \leq -20dBm$. It can be also noted that further increases of I_{dith} (e.g. to $0.5mA$ like in the same inset) does not practically lead to appreciable improvements in terms of $IIP2$.

Taking advantage of the investigation performed, all the 512 RoF links of AAVS1 have been recently equipped with a dithering tone generator which allows to keep the undesired spurious frequency terms generated by Rayleigh Backscattering to levels acceptable for the planned investigation activities of the Square Kilometre Array.

REFERENCES

[1] SKA Radio Telescope, SKA Organization, Manchester. Online Available: https://www.skatelescope.org/

[2] J. G. B. de Vaate *et al.*: The SKA1_Low Telescope: The Station Design and Prototyping, *Proc. URSI Atlantic Radio Science Meeting (AT-RASC)*, Meloneras, 2018.

[3] P. Benthem *et al.*: The low frequency receivers for SKA 1-low: Design and verification, *Proc. of URSI GASS*, Montreal, QC, 2017.

[4] M. Morant, R.Llorente, "Performance analysis of multiple radio-access provision in a multicore-fibre optical fronthaul", *Optics Commun.* Vol. 436, pp. 161–167, 2019.

[5] J. Nanni *et al.*: VCSEL-Based Radio-Over-G652 Fiber System for Short-/Medium-Range MFH Solutions, in IEEE/OSA *J. Lightw. Technol.*, vol. 36, pp. 4430-4437, Oct. 2018.

[6] G.Tartarini, *et al.* : Link design rules for cost-effective short-range radio over multimode fiber systems, *IEEE Trans. on Microw. Theory and Techn.*, Vol. 58, pp. 3144-3153

[7] Y. Shi *et al.*: First demonstration of HD video distribution over large-core POF employing UWB for in-home networks, Proc. OFC, Los Angeles, CA, Sept. 2011.

[8] G.Tartarini, P.Faccin, Efficient characterization of harmonic and intermodulation distortion effects in dispersive radio over fiber systems with direct laser modulation, Microw. Opt. Techn. Lett. Vol 46, pp. 114-117, May 2005

[9] F. Fuochi *et al.*: Digital predistortion technique for the compensation of nonlinear effects in radio over fiber links, *Proc. RTSI*, Bologna, Italy, Sept 2016.

[10] A. J. Faulkner and J. G. B. de Vaate: SKA low frequency aperture array, *Proc. USNC/URSI*, July 2015.

[11] M. Nakazawa: Rayleigh backscattering theory for single-mode optical fibers, *J. Opt. Soc. Am.*, vol. 73, pp. 1175–1180, Sep 1983.

[12] P. Wan and J. Conradi: Impact of double Rayleigh backscatter noise on digital and analog fiber systems, *IEEE/OSA J. Lightw. Technol.,* vol. 14, pp. 288–297, March 1996.

[13] P. Gysel, *et al.*: Spectral behavior of directly modulated laser diodes exposed to Rayleigh backscatter from a single-mode fiber, in *IEEE Photon. Technol. Lett.*, vol. 3, pp. 207–209, March 1991.

[14] U. Kruger , K. Kruger: Simultaneous measurement of the linewidth, linewidth enhancement factor α, and FM and AM response of a semiconductor laser, *IEEE/OSA J. Lightw. Technol*, vol. 13, pp. 592-597, Apr. 1995.

[15] S. L. Woodward and T. E. Darcie: A method for reducing multipath interference noise, in *IEEE Photon. Technol. Lett.,* vol. 6, pp. 450-452, March 1994.