PROCEEDINGS OF SPIE

SPIEDigitalLibrary.org/conference-proceedings-of-spie

Status of the radio receiver system of the Sardina Radio Telescope

Valente, G., Orfei, A., Nesti, R., Navarrini, A., Mariotti, S., et al.

G. Valente, A. Orfei, R. Nesti, A. Navarrini, S. Mariotti, P. Bolli, T. Pisanu, J. Roda, L. Cresci, P. Marongiu, A. Scalambra, D. Panella, A. Ladu, A. Cattani, L. Carbonaro, E. Urru, A. Cremonini, F. Fiocchi, A. Maccaferri, M. Morsiani, M. Poloni, "Status of the radio receiver system of the Sardina Radio Telescope," Proc. SPIE 9914, Millimeter, Submillimeter, and Far-Infrared Detectors and Instrumentation for Astronomy VIII, 991425 (20 July 2016); doi: 10.1117/12.2232880

SPIE.

Event: SPIE Astronomical Telescopes + Instrumentation, 2016, Edinburgh, United Kingdom

Downloaded From: https://www.spiedigitallibrary.org/conference-proceedings-of-spie on 04 Jun 2020 Terms of Use: https://www.spiedigitallibrary.org/terms-of-use

Status of the Radio Receiver System of the Sardinia Radio Telescope

G. Valente[1*], A. Orfei[2], R. Nesti[3], A. Navarrini[1], S. Mariotti[2], P. Bolli[3], T. Pisanu[1], J. Roda[2], L. Cresci[3], P. Marongiu[1], A. Scalambra[2], D. Panella[3], A. Ladu[1], A. Cattani[2], L. Carbonaro[3], E. Urru[1], A. Cremonini[4], F. Fiocchi[2], A. Maccaferri[2], M. Morsiani[2], M. Poloni[2]

[1]*INAF–Osservatorio Astronomico di Cagliari, 09047 Selargius, Italy*
[2]*INAF-Istituto di Radioastronomia, 40129 Bologna, Italy*
[3]*INAF-Osservatorio Astrofisico di Arcetri, 50125 Firenze, Italy*
[4]*SKA-Organisation, Jodrell Bank Observatory, Cheshire, United Kingdom*
**Contact: valente@oa-cagliari.inaf.it, phone +39 - 070 711 80 210*

Abstract

In this article, we present the design and performances of the radio receiver system installed at the Sardinia Radio Telescope (SRT). The three radio receivers planned for the first light of the Sardinian Telescope have been installed in three of the four possible focus positions. A dual linear polarization coaxial receiver that covers two frequency bands, the P-band (305-410 MHz) and the L-band (1.3-1.8 GHz) is installed at the primary focus. A mono-feed that covers the High C-band (5.7-7.7 GHz) is installed at the beam waveguide foci. A multi-beam (seven beams) K-band receiver (18-26.5 GHz) is installed at the Gregorian focus. Finally, we give an overview about the radio receivers, which under test and under construction and which are needed for expanding the telescope observing capabilities.

1. INTRODUCTION

The Sardinia Radio Telescope [1-2-3-4-5] (SRT, Lat. 39°29'34''N - Long. 9°14'42'' E, www.srt.inaf.it) is a major radio astronomical facility which is ready for performing outstanding scientific observations. It represents a flexible instrument for Radio Astronomy studies and Space Science, either in single dish or VLBI (Very Long Baseline Interferometry) mode. SRT is a fully steerable, 64m diameter parabolic radio telescope capable of operating with high efficiency in a wide frequency range: from 300 MHz to 116 GHz. The SRT optical configuration is a quasi-Gregorian system with a shaped parabola primary mirror M1, a shaped elliptical mirror M2 and three other mirrors M3, M4 and M5, which compose the beam waveguide Layout 1 (BWG-I) and Layout II (BWG-II), see Figure 1. Much attention has been dedicated to selecting the proper shaping of the Primary and Secondary mirrors in order to minimize the spill-over and standing waves. Figure 2 shows a comparison between the aperture illumination for a classical Gregorian optics and for the shaped SRT; the energy shifts away from the blocked centre region of the primary mirror, enhancing the antenna illumination efficiency and reducing the standing waves of the M2. Another benefit of this shaping design is the added taper at the main reflector edge, reducing both noise contributions and side lobe levels. A schematic view and the optical configuration are reported in Figure 1. At SRT, it is possible to install up to twenty receivers. This is assured by a combination of several foci available plus servo-assisted receiver assemblies (co-called "frequency agility"). This means that the SRT is capable of switching between different receivers remotely and automatically [8]. Table 1 reports the four focal positions, which are available now at SRT, the frequency range and the F/D ratio for each focus.

Focus		Minimum Frequency	Maximum Frequency	F/D ratio
Primary Focus	F1	300 MHz	20 GHz	0.33
Gregorian Focus	F2	7.5 GHz	116 GHz	2.34
BWG I	F3	1.4 GHz	35 GHz	1.38
BWG II	F4	1.4 GHz	35 GHz	2.81

Table 1. The four available focus positions at SRT.

Millimeter, Submillimeter, and Far-Infrared Detectors and Instrumentation for Astronomy VIII,
edited by Wayne S. Holland, Jonas Zmuidzinas, Proc. of SPIE Vol. 9914, 991425
© 2016 SPIE · CCC code: 0277-786X/16/$18 · doi: 10.1117/12.2232880

Downloaded From: https://www.spiedigitallibrary.org/conference-proceedings-of-spie on 04 Jun 2020
Terms of Use: https://www.spiedigitallibrary.org/terms-of-use

In the future, two further different beam-waveguide layouts (BWG-III and BWG-IV) will be added to the actual configuration. This requires two further ellipsoidal mirrors and will allow us to have two other focal positions (F5 and F6) available for the receiver systems.
In this article, we describe each configuration of the receiver system installed at SRT, showing the most important performances like system noise temperature (Tsys). In the last part of the document, we will outline the second generation of radio receivers for SRT.

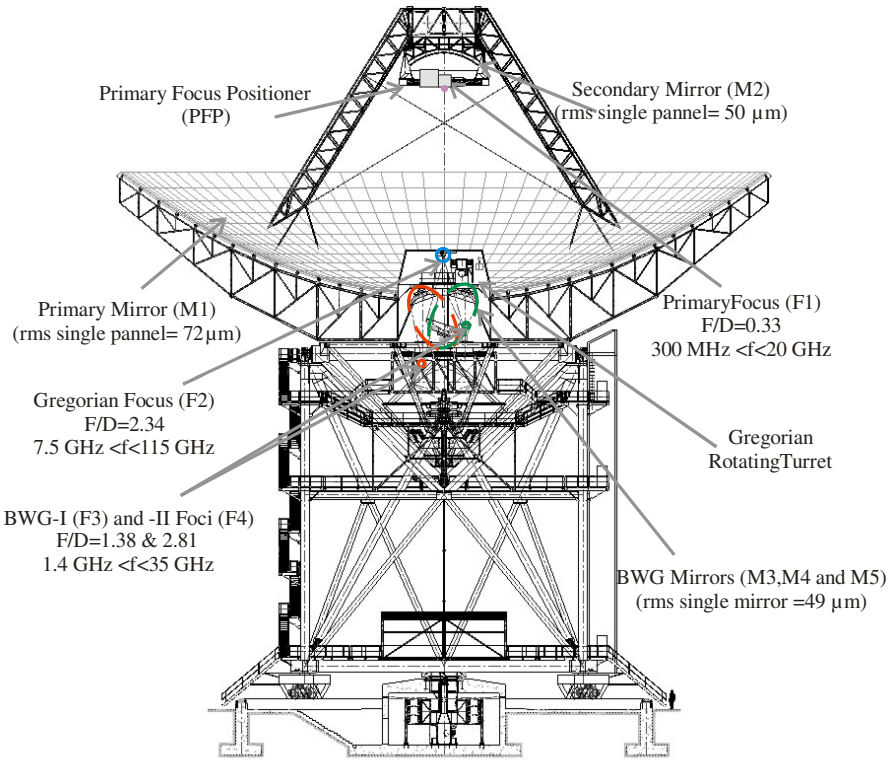

Figure 1. Sketch of the Sardinia Radio Telescope (www.srt.inaf.it). The picture shows all fundamental mechanical parts of the antenna and the reflecting surface.

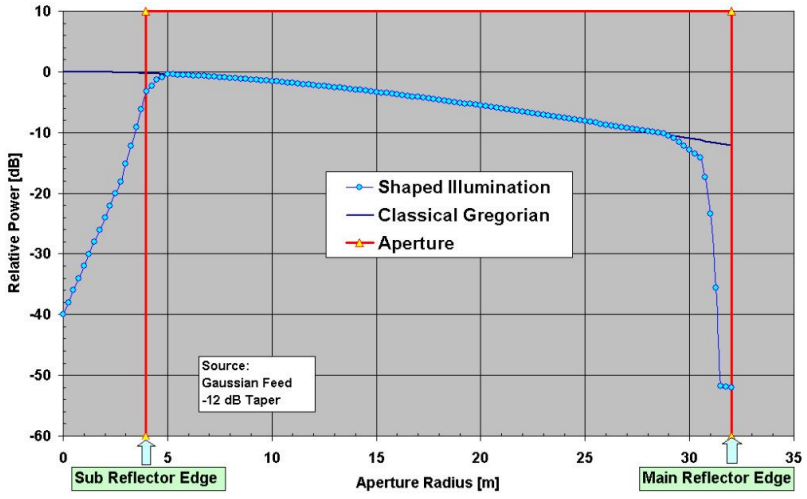

Figure 2. Simulated SRT aperture illumination [5].

Downloaded From: https://www.spiedigitallibrary.org/conference-proceedings-of-spie on 04 Jun 2020
Terms of Use: https://www.spiedigitallibrary.org/terms-of-use

2. FIRST LIGHT RECEIVER SYSTEM AT THE SARDINIA RADIO TELESCOPE

The goal of a radio astronomical receiver is to measure the radio emission of celestial sources [9-10-11].It must provide several functions: high gain, very wide frequency range, low Intermodulation distortion, high compression gain. Other very important parameters are the sensitivity, the stability and the low system noise that characterize the ability to process very weak signals, ($10^{-18} - 10^{-22}$ W). The receivers can be classified either in "Bolometer", which can detect only the amplitude of the signal, or in "Coherent" receiver. The latter is able to detect amplitude and phase of the signal. At present at SRT, there are only coherent receivers. A typical radio astronomical coherent receiver is based on a heterodyne configuration. Figure 3 shows a general radio astronomical receiver.

Basically, the antenna's reflector collects radio waves on the feed, which converts the free radio waves into guided waves. The second component is the signal noise injector, which is necessary for calibrating the amplitude of the receiver system. After the signal noise injector, a differential phase shifter (DPS) and an orthomode transducer (OMT) are present. These devices are designed using waveguide technology. The next device of the receiver chain is the Low Noise Amplifier (LNA). In modern radio astronomy receivers, the devices that form the front-end path are cooled at cryogenic temperatures. The RF signal coming from the LNA is filtered and mixed with a local oscillator, and the output signal is shifted to a new frequency range called "Intermediate Frequency" (IF), which is the lowest frequency range. At SRT, the IF frequency range is defined between 0.1-2.1 GHz. Afterwards, the IF signal is filtered and amplified.

The microwave receivers which were installed for the first light of SRT were: a coaxial-feed LP band receiver for the primary focus (F1); a mono-feed C band receiver for the BWG-I (F3); and a multi-feed K band receiver for the Gregorian focus (F2). Table 2 shows in detail the receivers which are installed and under construction for SRT.

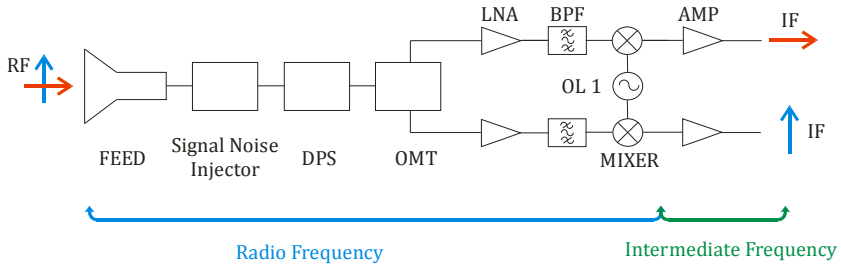

Figure 3. Generic schematic diagram of a radio astronomical heterodyne receiver.

Receiver system	Freq. range [GHz]	Focal position	N. pixels × polarizations	Measured/Expected* Receiver Temperature T_{RIC}[K]	Status
L- and P- band coaxial feed	P: 0.305-0.410	Primary	1 × 2	19	Commissioned
	L: 1.3-1.8		1 × 2	12	Commissioned
High C-band	5.7-7.7	BWG I	1 × 2	8	Commissioned
K-band	18-26.5	Gregorian	7 × 2	20-40	Commissioned
S-band	3-4.5	Primary	7 × 2	15*	Under construction
Low C-band	4.2-5.6	BWG II	1 × 2	8*	Under construction
Q-band	33-50	Gregorian	19 × 2	25*	Under construction
W-band	84-116	Gregorian	1 × 1	35*	Under construction
X- and Ka-band coaxial feed	X: 8.2-8.6	Primary	1 × 1	150	Under testing
	Ka:31.85-32.25		1 × 1	130	Under testing

Table 2. Summary of the installed receivers, which are under test and construction for the Sardinia Radio Telescope. The measured receiver temperatures are obtained in the laboratory by the Y-factor method.

Downloaded From: https://www.spiedigitallibrary.org/conference-proceedings-of-spie on 04 Jun 2020
Terms of Use: https://www.spiedigitallibrary.org/terms-of-use

2.1 Coaxial-Feed LP-Band Receiver[12-18]

The coaxial-feed LP-band receiver is a cryogenic receiver for the primary focus of the SRT. It simultaneously covers the 305-410 MHz (P-Band) and 1.3-1.8 GHz (L-Band). Its bandwidth was selected under instructions from astronomer requests. At the starting point of the design of the receiver, the P band had to cover the frequency range 305-425 MHz. After several radio frequency interference measurements, we decided to reduce the bandwidth and it is now narrower. The LP-band receiver has the capability of observing the radio source simultaneously in two different bands. This feature allows an accurate analysis of the ionospheric dispersion. This improves pulsar survey observations. Figure 4 shows the 3D view of the front-end. The configuration of the coaxial LP differ from the other installed radio receiver because the down conversion section is not present. In fact the RF signals of the LP receiver are inside the intermediate frequency range of the SRT.
The P-band path is depicted in detail in Figure 5. The signal's path is composed of a coaxial feed, which converts the free RF signal into a guided wave. The wave propagates inside the coaxial waveguide until the coaxial orthomode junction (COMJ), where each polarization is divided into two signals that are equal in amplitude and out of phase by 180 degrees. Therefore, the two signals arrive at the input of the cryostat through two distinct equi-phase cables. The signals go into the cryostat and are recombined with a 180° hybrid. In order to save space, we have decided to arrange both the 180° hybrid and the directional coupler into the same device. These two devices are realized on the Arlon AD1000 substrate using microstrip technology. At the output of the directional coupler, we inserted a commercial coaxial switch. After that, we have inserted a microstrip band pass filter to reject the strong RFI, and to preserve the linearity of the low noise amplifier. The filter is placed before the LNA. To reduce the noise temperature, the filter was designed in HTS technology (High Temperature Superconducting). The output signal from the cryostat goes to the hot part of the receiver, which is composed of three distinct sections: the noise calibration and antenna unit injection; the linear to circular polarization; and the filter sections. By setting the P linear to circular polarization section and the P filtered section, it is possible to choose the right combination of polarization and filter for the observation.

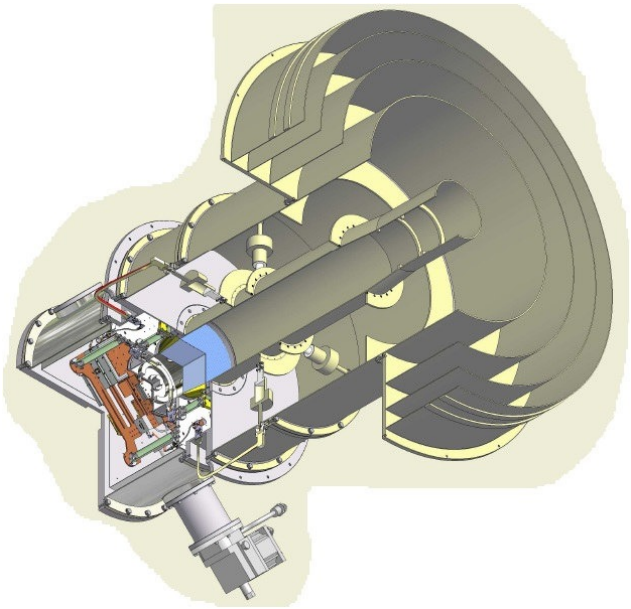

Figure 4. Cross-section view of the coaxial LP-band receiver;

Figure 6 depicts in detail all of the components of the L-band RF front-end path. The signal's path is composed of a cylindrical feed, which converts the free RF signal into a guided wave. The cylindrical feed is arranged inside the P-band feed and operates at room temperature. The wave propagates inside the waveguide to get to the vacuum window (see Figure 5), then the RF signal goes into the cryostat and crosses the orthomode junction (OMJ), where each polarization is split into two signals, that are equal in amplitude and out of phase by 180 degrees. Therefore, the two signals arrive at the input of the 180 degrees hybrid through two distinct equi-phase cable. At the output of the device,

Downloaded From: https://www.spiedigitallibrary.org/conference-proceedings-of-spie on 04 Jun 2020
Terms of Use: https://www.spiedigitallibrary.org/terms-of-use

we inserted a commercial coaxial switch. Afterwards, we have a planar directional coupler, which injects the signal that comes from the noise source generator. The directional coupler is realized on the Arlon AD1000 substrate in microstrip technology and is placed before the LNA, which works at the15K cryogenic temperature. The output signal from the cryostat goes to the hot part of the receiver, which is composed of distinct sections: noise calibration and antenna unit injection section, linear to circular polarization section and filter section. By setting the two last sections, it is possible to choose the right combination of polarization and filter for the observation.

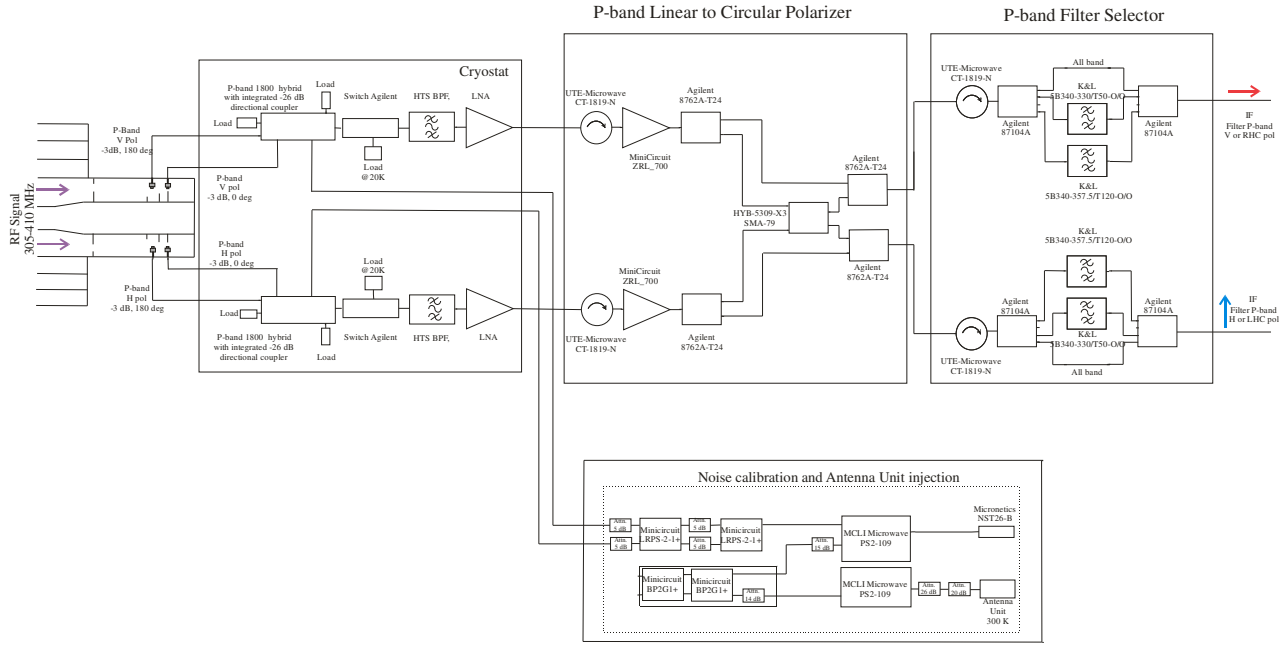

Figure 5. Schematic diagram of the only P-band

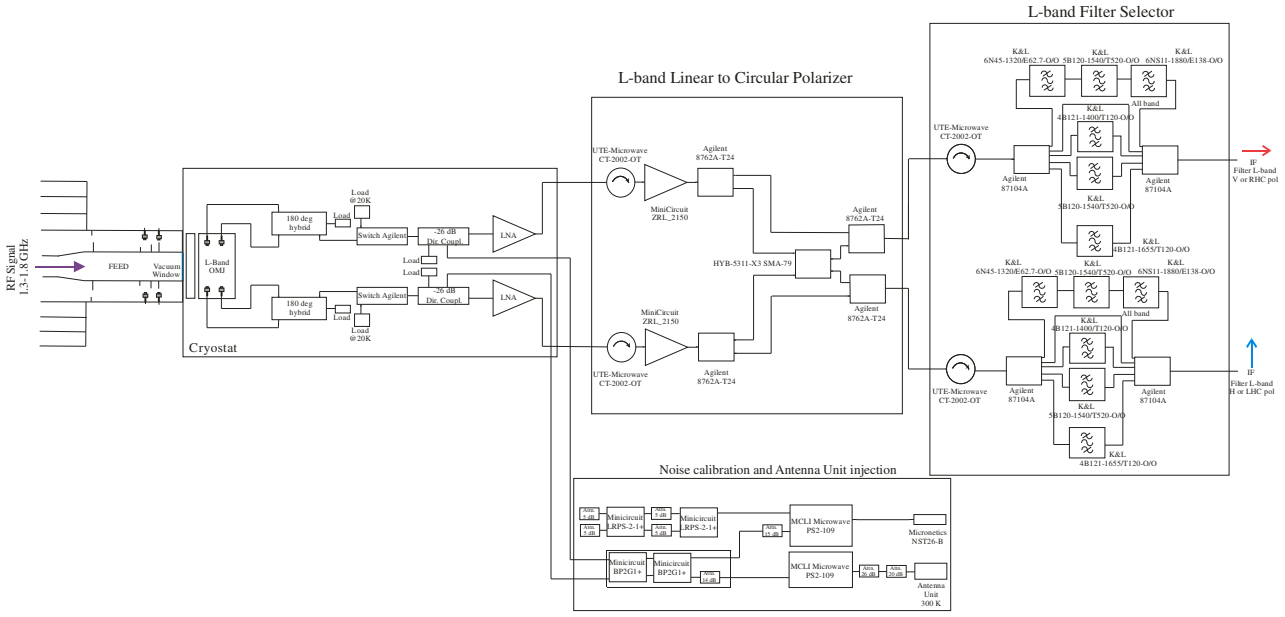

Figure 6. Schematic diagram of the only L-band

Downloaded From: https://www.spiedigitallibrary.org/conference-proceedings-of-spie on 04 Jun 2020
Terms of Use: https://www.spiedigitallibrary.org/terms-of-use

The noise temperatures at the input flanges of the receiver measured in the laboratory are in the range 17-22 K in P-band, and in the range 10-13 K in L-band for both linear polarization channels. The receiver is installed the primary focus positioner (PFP), which is a robotic arm that moves the front-end at its focal position during primary focus observations and that moves all of the primary focus front-ends out of the RF signal path when observations from the Gregorian or BWG foci are carried out.

2.1 Mono-Feed High C-Band Receiver [19-21]

The mono-feed high C-band receiver is a cryogenic receiver for the Beam Waveguide Layout I foci of the SRT. It covers 2 GHz of bandwidth centred at 6.7 GHz. At the beginning, the receiver was placed in the Gregorian focus (F2) of SRT and in summer 2012, SRT detected its first radio source with this receiver. The front-end is composed of: a corrugate feed horn which works at room temperature like the calibration noise injector. The noise injector is a circular waveguide to coaxial connector transition where it is possible to install a maximum of three different noise sources. At the moment, there is only one connected noise source. After the calibration noise injector, the signal across the vacuum windows and arrives at the DPS and OMT which are designed and realized using waveguide technologies. The last three cryogenic components are inside the cryostat. At each OMT output, a low noise amplifier is connected. After the LNA, the signal goes out from the cryostat and arrives at the amplifier and down-conversion section, which operates at room temperatures. The mono-feed C-band receiver has two down-conversion sections with two fixed local oscillators (LOs). The LO1 is set at 9.7 GHz to allow the selection of the middle frequency range (MF) 2-4 GHz. The LO2 is fixed at 4.1GHz and down converts the MF band (2-4 GHz) into intermediate frequency range (IF band) 0.1-2.1 GHz. To achieve a correct pump of the first and second passive mixers, the two local oscillators have been split and amplified. The second reference (LO2=4.1 GHz) has been generated with a commercial component, MITEQ DLCRO-010-4100-3-15P. The signal reference (F_{REF}=10 MHz) that is necessary to lock the Dual Loop Crystal Resonator Oscillator goes from the antenna reference distributor and it's phase locked to Maser atomic clock. Figure 8 shows the schematic diagram of the whole mono-feed C-band receiver, including the LO1 and LO2 distributors.

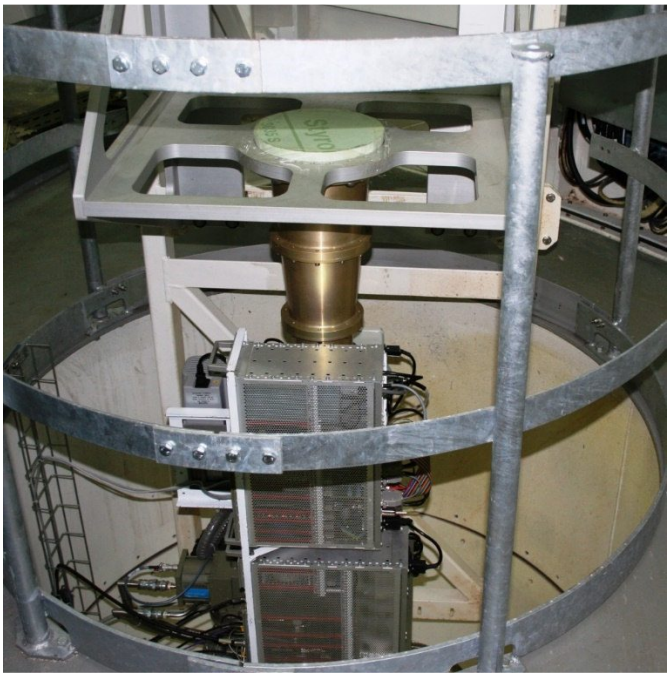

Figure 7. Fully assembled High C-band receiver installed on the BWG-I focus.

The measured receiver noise temperature at the feed input was below 9 K for both circular polarization channels (RHCP and LHCP).

Downloaded From: https://www.spiedigitallibrary.org/conference-proceedings-of-spie on 04 Jun 2020
Terms of Use: https://www.spiedigitallibrary.org/terms-of-use

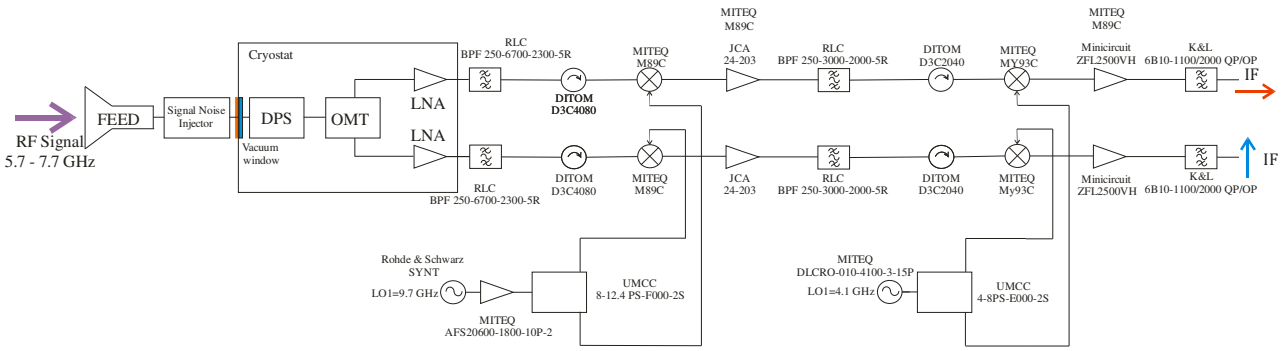

Figure 8. Schematic diagram of the whole Mono-Feed C-band Receiver.

2.2 Multi-Feed K-Band Receiver [22-23]

The Multi-Feed K-band receiver is a cryogenic receiver for the Gregorian focus of the SRT. It covers the band 18-26.5 GHz (BW≃35%).The K-band receiver has seven distinct and identical receiver chains. This means that the multi-feed K-band receiver allow us to increase the mapping speed of extended radio astronomy sources compared to a mono-feed. The focal plane array of the receiver has an hexagonal shape. The six feeds are arranged on the vertex of the hexagon. At the centre of the hexagon there is another feed. This arrangement allows a full Nyquist sampling of the sky. The front-end receivers chain are completely cooled at cryogenic temperature, including the corrugated feeds. The RF chain continues with a circular waveguide directional coupler for noise calibration injection, a differential phase shifter, an orthomode transducer and an InP MMIC low noise amplifier. All passive cryogenic components are realized using waveguide technologies. All the cryogenic components, active and passive, have been designed, prototyped, verified and tested. To compensate the relative rotation between earth and the celestial sphere the receiver is equipped of rotator system [23]. The internal view of the front-end is shown in figure 9-left. Figure 9-right shows the whole receiver which was installed on the rotating turret.

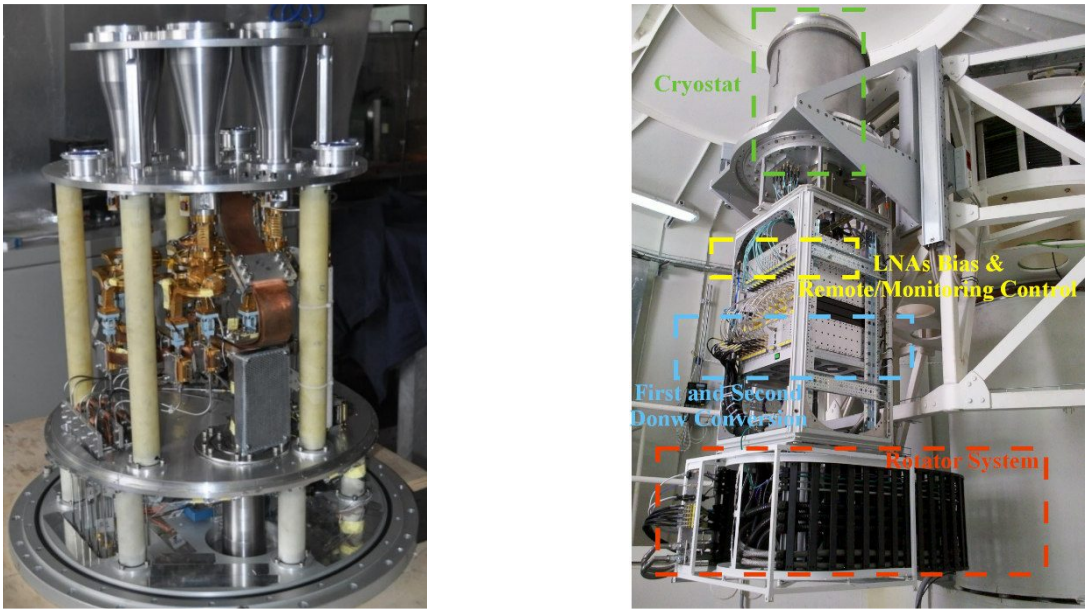

Figure 9:*left)* Cryogenic part of the multi-feed K-band receiver. The photo highlights the cryogenic system with the cylindrical G10 columns and cryocooler. *Right)* Photo of the receiver installed on the Gregorian focus of SRT. In the top of the picture the cylindrical cryostat is shown, in the middle there is the remotely controlled and the down-conversion section.

Downloaded From: https://www.spiedigitallibrary.org/conference-proceedings-of-spie on 04 Jun 2020
Terms of Use: https://www.spiedigitallibrary.org/terms-of-use

The middle part of the picture (see Figure 9-right) shows the bias electronics for the LNAs, the remote control of the cryogenic system and the down-conversion sections. In particular, these modules are arranged below the cryostat and work at room temperature. The RF signal goes out from the cryostat and is amplified with a hot LNA. After this amplifier, the signal is down converted into the middle frequency, 6-8 GHz, with a variable local oscillator (LO1). The LO1 is variable in the range 12-18.5 GHz to allow the selection of a 2 GHz bandwidth across the RF band (18-26.5 GHz). The LO2is fixed at 5.9 GHz. The second down-conversion moves the 6-8 GHz frequency range into the intermediate frequency of SRT (0.1-2.1 GHz). The second conversion is realized on a printed circuit board. The board has the final circuitry to divide the second local oscillator reference. The first down-conversion is composed of 14 modules, one for each polarization, whereby the second down conversion system is composed of seven modules only. Each board handles two circular polarizations. The multi-feed K-band receiver delivers a total IF bandwidth of 28 GHz (7 feeds x 2 polarizations x 2 GHz). The local oscillator distributor system is installed below the rack of the down conversions. The local oscillator distributor system is necessary to correctly pumping the two passive mixers. The noise temperature at the vacuum window of the receiver measured in the laboratory for the 14 channels is in the range 20-40 K across most of the 18-24 GHz band. The noise increases at frequencies above 24 GHz to values in the range of 40-60 K. Figure 10 shows the schematic diagram of the whole receiver, including the LOs distributor.

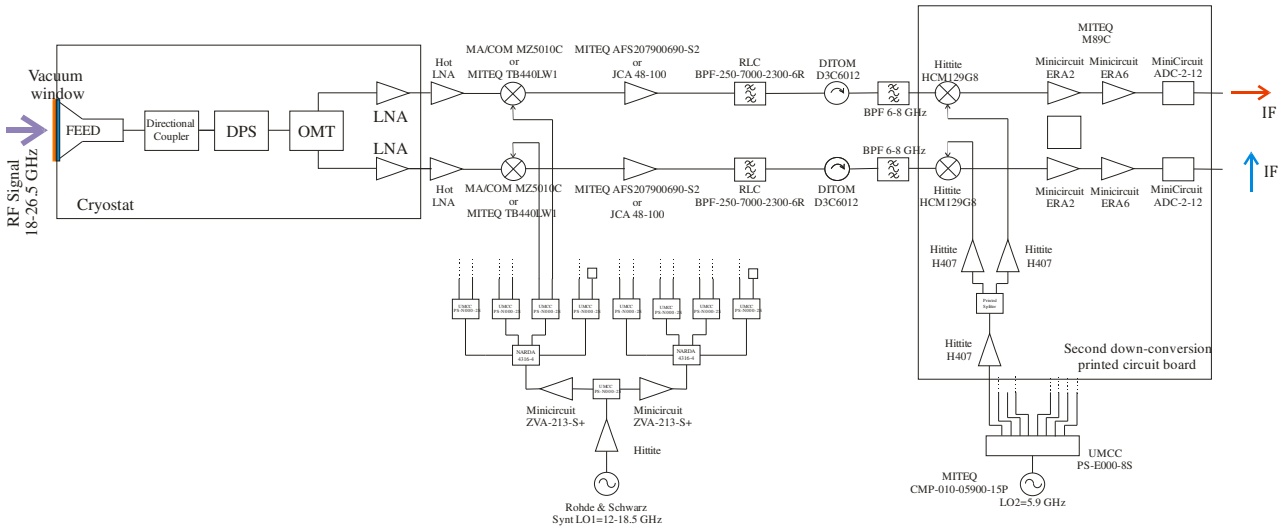

Figure 10. Schematic diagram of the whole multi-feed K-band receiver.

2.3 *Coaxial-Feed XKa-Band Receiver [24-25]*

A coaxial-feed XKa-band room temperature receiver has been installed at the primary focus (F1) of the SRT in spring 2015. The receiver simultaneously covers the X-band (8.2-8.6 GHz) and the Ka-band (31.85-32.25 GHz). The goal of the receiver is to demonstrate the SRT capabilities Space Science. The receiver has been originally developed for the 32-m diameter Noto radio telescope in order to track the Cassini spacecraft. The receiver has a single right circular polarization for each band. The intermediate frequency of this receiver is relatively smaller with respect to the previous receivers. The IF band is 400 MHz for each band centred at 300 MHz (IF:100-500 MHz). Figure 11 shows the internal view of the X-Ka receiver. The remote control and monitoring system has been designed and developed with the commercial Beckhoff modules. They are installed into the receiver and in the Apex room at SRT. Each channel has a double down conversion system. The X-band has two fixed local oscillator to transport the RF band into the IF band. The first local oscillator is set at 6.75 GHz (MF: 1.45-1.85 GHz) and the second local oscillator is set at 1.35 GHz. The Ka-band at the same time has two fixed local oscillators to transport the RF band into the IF band. The first local oscillator is set at 15.2 GHz but this value is multiplied by two; in this way, the real value of the first local oscillator is LO1=30.4 GHz (MF: 1.45-1.85 GHz) and the second local oscillator is the same of the X-band LO2=1.35 GHz. All three local oscillators need a reference signal at 50 MHz, which is generated internally to the receiver. Figure 12 shows a drawing of the receiver chain front-end, down-conversion section, the local oscillator and the reference signal distributor.

Downloaded From: https://www.spiedigitallibrary.org/conference-proceedings-of-spie on 04 Jun 2020
Terms of Use: https://www.spiedigitallibrary.org/terms-of-use



Figure 11: Internal view of the coaxial-feed receiver XKa- band during laboratory tests.

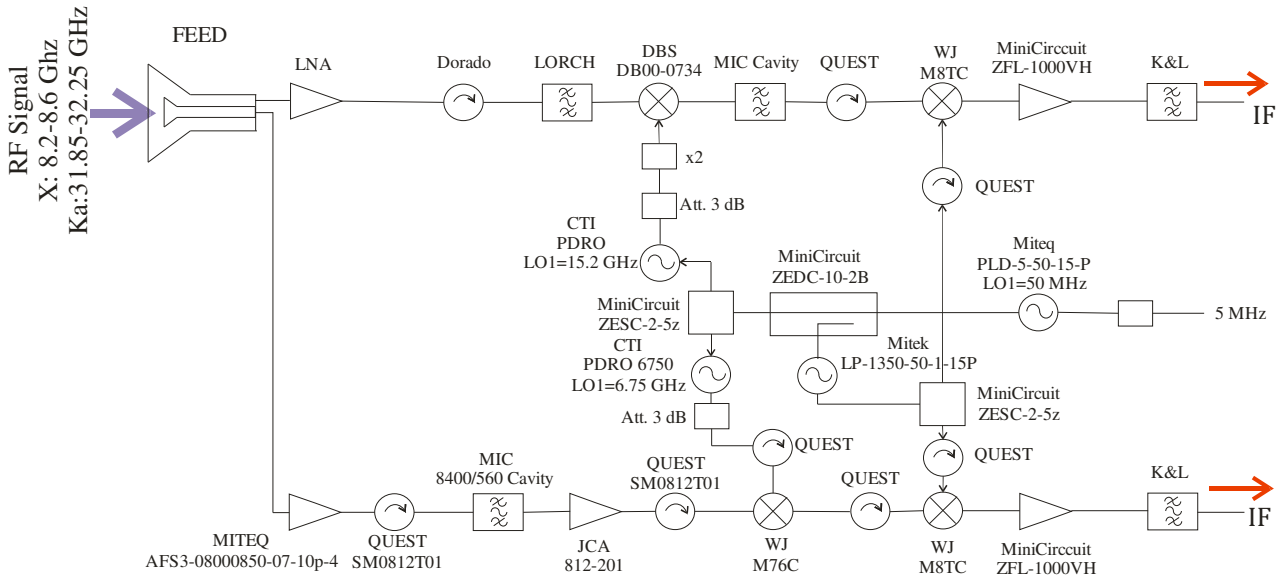

Figure 12. Schematic diagram of the coaxial-feed XKa-band receiver.

The receiver works at room temperature. The measured noise temperatures are 150K for the X-band channel and about 130 K for the Ka-band channel.

3. RECEIVER SYSTEM UNDERTEST AND UNDER CONSTRUCTION FOR SRT

In this section, we present the second generation of the radio receivers for the Sardinia Radio Telescope. In accordance with the SRT project book [26], three new cryocooled radio receivers are being developed. The receivers that are under development are: a multi-feed S-band for the primary focus; a multi-feed Q-band for the Gregorian focus; and a mono-feed low C-band for the beam waveguide layer II. Finally, a reviewed mono-feed W-band receiver is under test in our laboratories.

The multi-feed S-band receiver is a cryogenic receiver. It covers the RF band 3-4.5 GHz, BW≃40% [27-28-29]. It has seven double linear polarizations outputs, each of 1.5 GHz bandwidth. The receiver delivers a total IF bandwidth of 21

Downloaded From: https://www.spiedigitallibrary.org/conference-proceedings-of-spie on 04 Jun 2020
Terms of Use: https://www.spiedigitallibrary.org/terms-of-use

GHz (seven feeds with two linear polarization of 1.5 GHz). The system has a simple front-end with a circular waveguide feed, a directional coupler and a quad-ridged waveguide, which are cooled at cryogenic temperature. The low noise amplifier is a commercial component. The down conversion section has a single fixed local oscillator at 4.9 GHz. Figure13shows the 3D viewer of the whole front-end receiver. The estimated noise temperature at the central frequency (3.75 GHz) is 15 K.

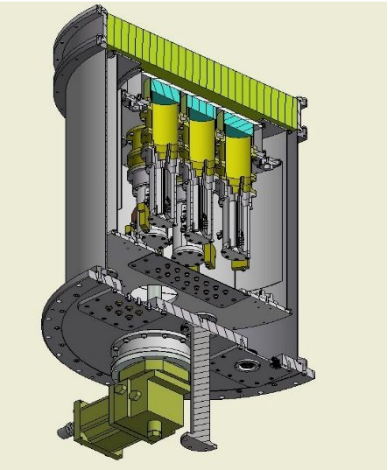

Figure 13: 3D sketch of the cryogenic multi-feed S-band receiver.

The multi-feed Q-band receiver [30-31] is a cryogenic receiver. It covers the RF band between 33 to 50 GHz (BW≃40%). The Q-band receiver will have 19 beams on the focal plane array. Consequently, the receiver will be formed by 38 circular polarizations output signal, each of 1.6 GHz bandwidth. The receiver has many components developed in our laboratory like the thermal gap to minimize the thermal conduction and to minimize the vertical dimension of the cryostat, or the new down-conversion module. This module integrates, into the same metallic case, the RF amplifiers, mixer, planar band pass filter and multiplier module for the fixed external local oscillator. The first down-conversion moves the RF band from 33-50 GHz into the MF band 1-18 GHz. The second down-conversion module has a variable second local oscillator. The LO2 allow us to select the IF band (0.1-1.6 GHz) across the MF range (1-18 GHz). The whole front-end is cooled at cryogenic temperatures. The front-end path is composed of: corrugate feed, calibration noise injector, differential phase shifter, OMT, commercial low noise amplifier, thermal gap and conversion module. The last component works at room temperature but is arranged inside the cryostat. Figure 14 shows the 3D viewer of the front-end. The estimated noise temperature of the instrument at the central frequency (41.5 GHz) is 25 K.

The third receiver that is under development is a mono-feed low C-band for the BWG-II foci (F4). The receiver covers the frequency range 4.2-5.6 GHz (BW: 30%). The front-end design of this receiver is similar to the high C-band and will be used mainly for VLBI observations. The estimated noise temperature of the instrument at the central frequency (4.9 GHz) is 8 K.

A mono-feed W-band receiver based on superconducting SIS Single Side Band mixer, designed and assembled by IRAM, was purchased by INAF-OAC following its decommissioning from the IRAM PdB Interferometer. The receiver is being adapted for its installation at the SRT's Gregorian focus, where it will be used for testing the telescope performance up to the highest frequencies (about 116 GHz), while allowing the first scientific observations across the 3 mm atmospheric window. Several modifications were being made to the IRAM receiver, which include: a new cryogenic system, new optics, a new control system and a new local oscillator (ALMA Band 3 LO module), which was purchased from NRAO [32]. The Figure 15 shows the internal views of the cryostat.

Downloaded From: https://www.spiedigitallibrary.org/conference-proceedings-of-spie on 04 Jun 2020
Terms of Use: https://www.spiedigitallibrary.org/terms-of-use

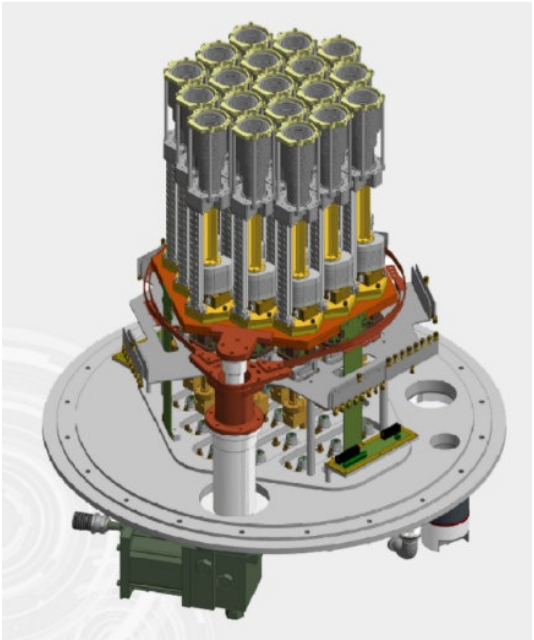

Figure 14: 3D sketch of the cryogenic multi-feed Q-band receiver.

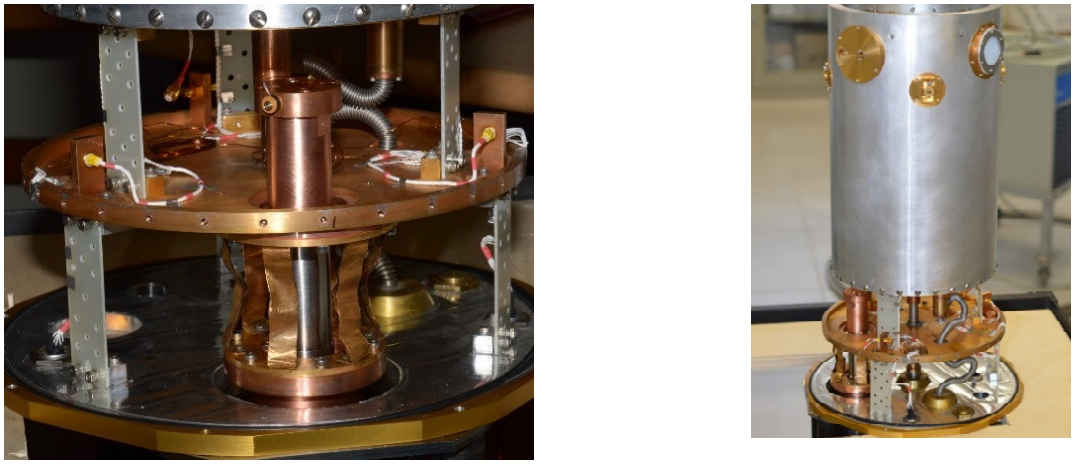

Figure 15: Photo of the front-end of the mono-feed W-band receiver. *Left)* detail of cryogenic parts. *Right)* Photo of the whole internal front-end receiver.

4. CONCLUSIONS

We gave an overview of the status of the current installed receivers and those under development for the 64-m diameter Sardinia Radio Telescope. The SRT has started an early science program in February 2016 and is currently producing remarkable scientific results.

Downloaded From: https://www.spiedigitallibrary.org/conference-proceedings-of-spie on 04 Jun 2020
Terms of Use: https://www.spiedigitallibrary.org/terms-of-use

5. REFERENCES

[1] Gavril Grueff, Et. Al., , "Sardinia Radio Telescope: the new Italianproject", SPIE 5489, Ground-basedTelescopes, (28 September 2004); doi: 10.1117/12.550332;

[2] Gianni Tofani, Et Al. , "Status of the Sardinia Radio Telescope project", SPIE 7012, Ground-based and Airborne Telescopes II, 70120F (10 July 2008); doi: 10.1117/12.790503

[3] Ambrosini, R.,Bocchinu, A. ; Bolli, P. ; Buffa, F. ; Buttu, M. ; Cattani, A. ; D'Amico, N. ; Deiana, G.L. ; Fara, A. ;Fiocchi, F. ; Gaudiomonte, F. ; Maccaferri, A. ; Mariotti, S. ; Marongiu, P. ; Melis, A. ; Melis, G. ;Migoni, C. ; Morsiani, M. ; Nanni, M. ; Nasyr, F. ; Nesti, R. ; Orfei, A. ; Orlati, A. ; Perini, F. ;Pernechele, C. ; Pilloni, S. ; Pisanu, T. ; Poloni, M. ; Poppi, S. ; Porceddu, I. ; Righini, S. ; Roda, J. ;Scalambra, A. ; Schirru, M.R. ; Serra, G. ; Stringhetti, L. ; Trois, A. ; Tuveri, A. ; Valente, G. ; Vargiu, G. ; Zacchiroli, G., "The sardinia radio telescope: Overview and status",," IEEE International Conference on Electromagnetics in Advanced Applications (ICEAA 2013), (Torino, Italy), September 9-13, 2013.;

[4] P. Bolli, A. Orlati, L. Stringhetti, A. Orfei, S. Righini, R. Ambrosini, M. Bartolini, C. Bortolotti, F. Buffa, M. Buttu, A. Cattani, N. D'amico, G. Deiana, A. Fara, F. Fiocchi, F. Gaudiomonte, A. Maccaferri, S. Mariotti, P. Marongiu, A. Melis, C. Migoni, M. Morsiani, M. Nanni, F. Nasyr, A. Pellizzoni, T. Pisanu, M. Poloni, S. Poppi, I. Porceddu, I. Prandoni, J. Roda, M. Roma, A. Scalambra, G. Serra, A. Trois, G. Valente, G.P. Vargiu, G. Zacchiroli, " Sardinia Radio Telescope: General Description, Technical Commissioning and First Light", Journal of AstronomicalInstrumentation, Vol. 4, Nos. 3 & 4 (2015) 1550008 #.c World Scientific Publishing Company DOI: 10.1142/S2251171715500087;

[5] Vertex, "64-Meter Sardinia Radio Telescope Final Design Report Optics and Design" Systems Division, Santa Clara Facility;

[6] A. Orfei; M.Morsiani; G.Zacchiroli; G. Maccaferri; J. Roda; F. Fiocchi, "Active surfacesystem for the new SardiniaRadiotelescope", , Proc. SPIE 5495, Astronomical Structures and Mechanisms Technology, (29 September 2004); doi:10.1117/12.548944;

[7] P. Bolli, L. Olmi ; J. Roda ; G. Zacchiroli, "A Novel Application of the Active Surface of the Shaped Sardinia Radio Telescope for Primary-Focus Operations" IEEE Antennas and Wireless Propagation Letters (Volume:13), 2014;

[8] M. Buttu ; A. Orlati ; G. Zacchiroli ; M. Morsiani ; F. Fiocchi, F. Buffa ; G. Maccaferri ; G. P. Vargiu ; C. Migoni ; S. Poppi ; S. Righini ; A. Melis, "Divinginto the Sardinia Radio Telescope minor servo system", Proc. SPIE 8451, Software and Cyberinfrastructure for Astronomy II, 84512L (September 24, 2012); doi:10.1117/12.925387; http://dx.doi.org/10.1117/12.925387

[9] John D. Kraus, "radio Astronmy", McGraw- Hill Book Company, 1966;

[10] Thomas Wilson, Kristen Rohlfs, Susanne Huettemeister "Tools of Radio Astronomy" (Astronomy and Astrophysics Library) 6th ed. 2014 Edition, Springer;

[11] David M. Pozar, "Microwave Engineering", WILY, John Wiley & Sons, Inc, 2005;

[12] G. Valente, T. Pisanu, P. Bolli, S. Mariotti, P. Marongiu, A. Navarrini, R. Nesti, A. Orfei, The dual-band LP feed system for the Sardinia Radio Telescope prime focus, in Proc. SPIE Millimeter, Submillimeter, and Far-Infrared Detectors and Instrumentation for Astronomy V, Vol. 7741, 774126, 2010.

[13] G. Valente, A. Navarrini, T. Pisanu, "A novel 180°HybridPower Divider", Proc. SPIE, vol. 7741, Millimeter, Submillimeter, and Far-Infrared Detectors and Instrumentation for Astronomy V, Jul. 2010.G. Valente, A. Navarrini, and T. Pisanu, "Double ridged 180 hybrid power divider with integrated band pass filter," IEEE Microw. Wireless Compon. Lett., vol. 21, no. 1, pp. 13–15, Jan. 2011.

[14] T. Pisanu, P. Marongiu, A. Navarrini, and G. Valente, A compact L-band Orthomode Junction, Proc. SPIE, vol. 7741, Millimeter, Submillimeter, and Far-Infrared Detectors and Instrumentation for Astronomy V, Jul. 2010.

[15] G. Valente, G. Montisci, T. Pisanu, A. Navarrini, P. Marongiu, A. Casula, "A compact L-Band Orthomode Transducer for Radio Astronomical Receivers at Cryogenic Temperature", IEEE Trans. Micr. Theory and Tech., Vol. 63, Issue 10, pp. 3218, Oct. 2015.

[16] G. Valente, G. Montisci, S. Mariotti, High-performance microstrip directional coupler for radio-astronomical receivers at cryogenic temperature, Electronics Letters 50, 449 – 451, (2014).

[17] P. Bolli, F. Huang, Superconducting filter for radio astronomy using interdigitated, capacitively loaded spirals, Experimental Astronomy, March 2012, Volume 33, Issue 1, pp 225-236.

[18] S. Mariotti, G. Valente, Calibrazione della Marca di Rumore del Ricevitore Coassiale L P, IRA Internal Report n. 26, June 12, 2013. Revisore: Pietro Bolli.

[19] L. Cresci, P. Curioni, V. Natale, R. Nesti, A. Orfei, D. Panella, J. Roda, C-band Circular Corrugated horn for the SRT Beam Waveguide Focus, Technical Memo GAI04-TM-13.0, May 7th, 2011.

[20] O. Peverini, A. Virone, G. Addamo, R. Tascone, Development of passive microwave antenna-feed systems for wide-band dual-polarisation receivers, IET Microwaves, Antennas &Propag. Vol. 5, Issue 8, pp. 1008–1015, June 2011.

[21] A. Orfei, A. Cattani, M. Poloni, J. Roda, S. Mariotti, A. Maccaferri, A. Orlati, A. Scalambra, Caratterizzazione del rivcevitore nella banda 5.7-7.7 GHz, SRT Memo Series GAI04-FR-5.0 May 5th, 2011.

[22] A. Orfei, L. Carbonaro, A. Cattani, A. Cremonini, L. Cresci, F. Fiocchi, A. Maccaferri, G. Maccaferri, S. Mariotti, J. Monari, M. Morsiani, V. Natale, R. Nesti, D. Panella, M. Poloni, J. Roda, A. Scalambra, G. Tofani, A Multi-FeedReceiver in the 18 to 26.5 GHz Band for Radio Astronomy, IEEE AntennasPropag. Mag. 52(4), 62, 2010.

Downloaded From: https://www.spiedigitallibrary.org/conference-proceedings-of-spie on 04 Jun 2020
Terms of Use: https://www.spiedigitallibrary.org/terms-of-use

[23] A. Scalambra, A. Cattani, F. Fiocchi, A. Maccaferri PCB IIK PCB di II° conversioneper il sistema multifeed 22GHz, Rapporto Interno IRA N.474/13.
[24] A. Scalambra, J. Roda, S. Mariotti, R. Ambrosini, Doppio Ricevitore Coassiale per le Bande X-Ka dedicato alla missione Cassini, INAF-Institute of Radio Astronomy, Internal Report N. 331/03, 2004.
[25] T. Pisanu, R. Ambrosini, E. Egron, E. Flamini, N. Iacolina, S. Mariotti, G. Mariotti, P. Marongiu, A. Orlati, P. Ortu, A. Pellizzoni, M. Pili, A. Scalambra, P. Tortora, J. Roda, E. Urru, G. Valente, Installation and characterization of an X-Ka receiver on the Sardinia Radio Telescope, Proceedings of 36th ESA Antenna Workshop, ESA-ESTEC, The Netherlands, 6-9 October 2015.
[26] Cenacchi, E., "SRT Project Book", Internal Report, May 2007.
[27] G. Valente, G. Serra, F. Gaudiomonte, A. Ladu, T. Pisanu, P. Marongiu, A. Corongiu, A. Melis, M. Buttu, D. Perrodin, G. Montisci, G. Mazzarella, E. Egron, N. Iacolina, C. Tiburzi, V. Vacca, A MultiFeed S-Band CryogenicReceiver for the SardiniaRadio Telescope Primary Focus, Proc. SPIE 9153 Millimeter, Submillimeter and Far-Infrared Detectors and Instrumentation for Astronomy VII, July 2014.
[28] G. Valente, P. Marongiu, A. Navarrini, A. Saba, G. Montisci, A. Ladu, T. Pisanu, M. Pili, S. Dessi, A. Uccheddu, N. Iacolina, D. Perrdin, M. Buttu, E. Egron, A. Melis, C. Tiburzi, V. Vacca, The 7-Beam S-Band Cryogenic Receiver for the Sardinia Radio Telescope Primary Focus: Status of Project, to be published in Proc. SPIE Astronomical Telescope and Instrumentation, 2016.
[29] A. Ladu, G. Valente, G. Montisci, G. Mazzarella," A wideband quadruple-ridged horn antenna for the multifeed S-band receiver of the Sardinia Radio Telescope", Journal of Electromagnetic Waves and Applications, 2016: doi: 10.1080/09205071.2016.1187094.
[30] A. Orfei, A. Cattani, A. Cremonini, L. Cresci, A. Maccaferri, S. Mariotti, R. Nesti, D. Panella, M. Poloni, J. Roda, A. Scalambra, Elementi per la realizzazione di un multifeed per SRT nella banda 33-50 GHz, SRT Memo TM-19.1, 2013.
[31] G. Pisano, R. Nesti, M. W. Ng, A. Orfei, D. Panella, P. Wilkinson, A novel Q-band broadband polarizer with very flat response, Journal of Electromagnetic Waves and Applications, Vol. 26, Issue 5-6, 2012.
[32] A. Ladu, T. Pisanu, A. Navarrini, P. Marongiu, G. Valente, A 3 mm band SIS Receiver for the Sardinia Radio Telescope, Proc. SPIE 9153 Millimeter, Submillimeter and Far-Infrared Detectors and Instrumentation for Astronomy VII, July 2014.

Downloaded From: https://www.spiedigitallibrary.org/conference-proceedings-of-spie on 04 Jun 2020
Terms of Use: https://www.spiedigitallibrary.org/terms-of-use